CRMF27-D

Commercial Series Undercounter Freezer with Drawers

CRMF27-D
04/03/17
Item # 13337

Item #: _____

Project: _____

Qty: _____

AIA#: _____

W x D x H
27” x 30” x 33.63”*
*with 4” casters

CRMF27-D

Features

- **Stainless steel exterior front, sides and top**
- **Stainless steel interior sides and back with stainless steel interior floor**
- **Stainless steel exterior drawer with stainless steel interior**

- Front breathing air flow design
- Cabinet and drawers are insulated with 2” CFC free, foamed in place polyurethane
- Drawer slides are constructed of 16 gauge stainless steel with acetal rollers
- Drawers will accommodate (1) 12” x 20” x 6” deep pan (pan by others)
- Extruded aluminum flush mount drawer handle
- Magnetic drawer gasket is easily removable for cleaning
- Enamel coated evaporator coil
- Standard with 4” casters (two with brakes)
- Three year parts and labor warranty
- Five year compressor warranty
- 8 ft. cord and plug

Dimensions / Capacity	One Section CRMF27-D
Interior Storage Capacity (CF)	7.2 ft^3
Interior Storage Capacity (CF) (AHAM)	6.2 ft^3
Overall Width x Depth (including 1” bumper)	27” x 31”
Height (including 4” casters)	33.63”
Door Opening Width x Height	22.6” x 22.9”
Depth with Drawer Fully Open (including 1” bumper)	50.25”
Pan Capacity (12” x 20” x 6” deep pans)	1 pan per drawer
Crated Weight	176 lbs.
Crated Width x Depth x Height	31.5” x 34” x 36.5”

Electrical / Refrigeration	One Section CRMF27-D
Voltage	115/60/1
HACR Breaker	15.0 Amps
Electrical Connection (NEMA)	5-15P
Voltage Range	104-126
Ambient Temp. Range	45° to 100°F
Control Setpoint Range	-10° to 10°F
Amperage	3.4
Energy Consumption (kWh/day) @NSF	3.9
Heat Rejection (BTU/Hr.) @NSF	560
Approx. Nominal Compres. BTU/HR (HP)	841(1/5HP)
Refrigerant / Charge Amount (oz)	R-134a (5 oz)

Options

- ☐ 2.25” Casters
- ☐ 6” Casters
- ☐ 6” Legs
- ☐ Overshelves
- ☐ Stainless steel back
- ☐ Drawer divider bars
- ☐ Rail adapter bars

Warranty

* 3 Year - parts and Labor on entire machine.
5 Year - Parts on Compressor
Valid in United States, Canada, Puerto Rico and U.S. Territories. Contact factory for warranty in other countries.

Printed in the U.S.A.

Hoshizaki reserves the right to change specifications without notice.

CRMF27-D

Commercial Series Undercounter Freezer with Drawers

CRMF27-D
04/03/17
Item # 13337

FRONT VIEW

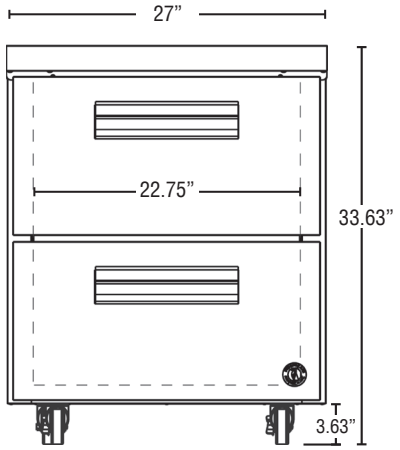

CRMF27-D

SIDE VIEW

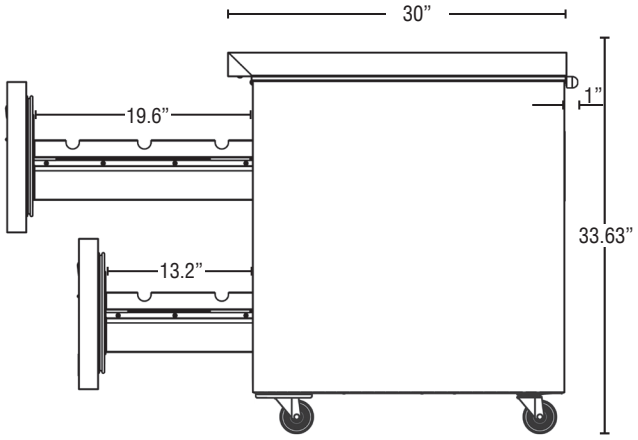

CRMF27-D

PLAN VIEW

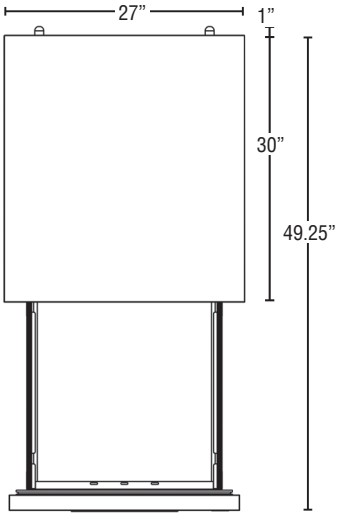

CRMF27-D

Cabinet Construction

The exterior cabinet top, front, and sides, are constructed of high quality stainless steel. The exterior back and bottom are constructed of coated steel. The cabinet interior back and sides are anodized aluminum with an ABS ceiling and stainless steel floor. One heavy duty epoxy coated shelf per section is standard. Mounted on anodized aluminum pilasters the shelves are adjustable in ½” increments. Cabinet walls and doors are insulated with 2” of environmentally friendly, CFC free, foamed in place polyurethane. 4” polyolefin, stem casters (two with brakes) are standard.

Drawer Construction

Drawer fronts are constructed of high grade stainless steel inside with ABS interior liners and are insulated with R-134a CFC free foamed in place polyurethane. Each drawer accommodates (1) 12” x 20” x 6” deep pan (pans by others). Drawer frames are formed of 14 gauge stainless steel and securely fastened in the cabinet. The drawer slides are 16 gauge stainless steel with acetal rollers to prevent metal to metal contact between the drawer slides and reduce wear. The drawer slides have a dynamic load capacity of 175 lbs. and have been life tested (fully loaded) three hundred thousand openings and closings without showing significant wear. The flush mount handles are constructed of extruded aluminum. Snap-in magnetic drawer gaskets are durable and easily removed for cleaning.

Refrigeration System

The high efficiency refrigeration system is self-contained with an enamel coated evaporator for extended life. Condensate removal is accomplished with an energy efficient non-electric evaporation system. A capillary tube controls the flow of environmentally friendly R-134a refrigerant through the evaporator. Unit is provided with an automatic time heated defrost to remove any ice on the evaporator coil. 115 volt units are equipped with an eight foot cord and plug (20.0 amps or less).

Printed in the U.S.A.