# CRMR48-12D4

## Commercial Series Sandwich Top Refrigerator with Drawers

CRMR48-12D4
01/17/17
Item # 13335

Item #: _____

Project: _____

Qty: _____

AIA#: _____

**W x D x H**
48” x 30” x 45.25”*
*with 6” casters

**CRMR48-12D4**

MANUFACTURED IN THE USA

The KCL CADalog

Intertek

Intertek

ISO9001 · ISO14001

FACTORY WARRANTY *
Parts & Labor 3 YR Entire Machine
Parts 5 YR Compressor

| Dimensions / Capacity | Two Section CRMR48-12D4 |
|---|---|
| **Interior Storage Capacity** (CF) | 13.66 $ft^3$ |
| **Interior Storage Capacity** (CF) (AHAM) | 11.95 $ft^3$ |
| **Overall Width x Depth** (including 1” bumper) | 48” x 31” |
| **Height** (including 6” casters) | 45.25” |
| **Depth with Cutting Board Installed** | 30.7” |
| **Drawer Opening Width x Height** | 19.5” x 22.9” |
| **Depth with Drawer Fully Open** (including 1” bumper) | 50.25” |
| **Pan Capacity** (# of 1/6 size x 4” deep) | 12 |
| **Maximum Pan Depth** | 6” |
| **Crated Weight** | 262 lbs. |
| **Crated Width x Depth x Height** | 52.5” x 34” x 46.2” |

| Electrical / Refrigeration | Two Section CRMR48-12D4 |
|---|---|
| **Voltage** | 115/60/1 |
| **HACR Breaker** | 15.0 Amps |
| **Electrical Connection** (NEMA) | 5-15P |
| **Voltage Range** | 104-126 |
| **Ambient Temp. Range** | 45° to 100°F |
| **Control Setpoint Range** | 32° to 52°F |
| **Amperage** | 2.6 |
| **Energy Consumption** (kWh/day) @NSF | 4.0 |
| **Heat Rejection** (BTU/Hr.) @NSF | 567 |
| **Approx. Nominal Compres.** BTU/HR (HP) | 1029(1/6HP) |
| **Refrigerant / Charge Amount** (oz) | R-134a (6.5 oz) |

### Options

- ☐ 2.25” Casters
- ☐ 4” Casters
- ☐ Stainless steel lift off covers
- ☐ Stainless steel back
- ☐ 6” Legs
- ☐ Overshelves

### Warranty

* 3 Year - parts and Labor on entire machine.
5 Year - Parts on Compressor

Valid in United States, Canada, Puerto Rico and U.S. Territories. Contact factory for warranty in other countries.

## Features

- **Engineered to maintain NSF-7 temperatures in 100°F ambient. (Certified to NSF-7 temperatures in 86°F ambient.)**
- **Stainless steel exterior front, sides and top**
- **Stainless steel interior sides and back with stainless steel interior floor**
- Cabinet and doors are insulated with 2” CFC free, foamed in place polyurethane
- Front breathing air flow design
- Innovative air distribution system distributes air evenly to maintain product temperature
- Provided with a full complement of polycarbonate plastic 1/6th size pans, 4” deep and adapter bars
- Rails will also accept 6” deep pans for 50% more pan volume
- 48” x 10” x 1/2” thick white polyethylene cutting board is standard
- Drawer slides are constructed of 16 gauge stainless steel with acetal rollers
- Drawer frames are formed of 14 gauge stainless steel and securely fastened in the cabinet
- Drawers will accommodate (1) 1/2 and (1) 1/3 size pans 6” deep (pans by others)
- Extruded aluminum flush mount drawer handle
- Magnetic door gasket is easily removable for cleaning
- Enamel coated evaporator coil
- Standard with 6” stem casters (two with brakes)
- Three year parts and labor warranty
- Five year compressor warranty
- 8 ft. cord and plug

Printed in the U.S.A.

*Hoshizaki reserves the right to change specifications without notice.*

# CRMR48-12D4

## Commercial Series Sandwich Top Refrigerator with Drawers

CRMR48-12D4
01/17/17
Item # 13335

### FRONT VIEW

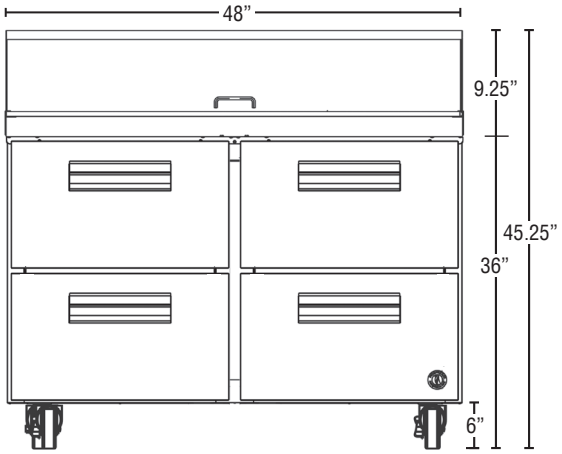


CRMR48-12D4

### SIDE VIEW

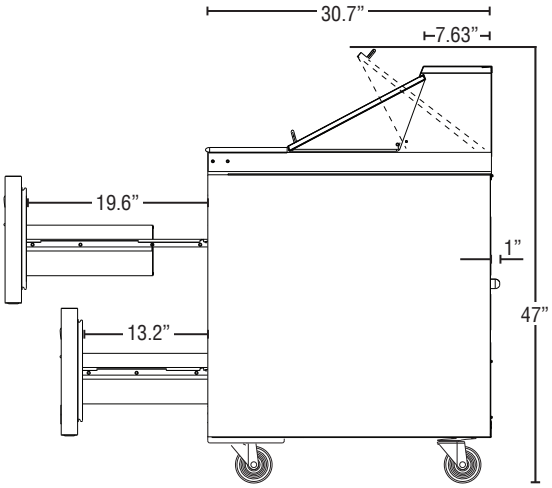


CRMR48-12D4

### PLAN VIEW

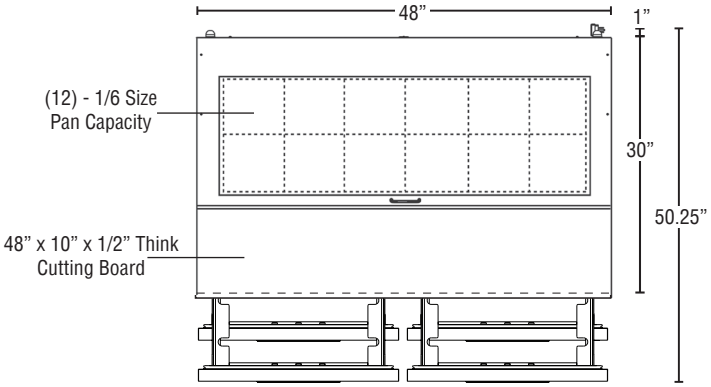


CRMR48-12D4

### Cabinet Construction

The exterior cabinet top, front, and sides, are constructed of high quality stainless steel. Cabinet is provided with a stainless steel top enclosure and an easily removable stainless steel insulated lift-up cover.The exterior back and bottom are constructed of coated steel.The cabinet interior back and sides are stainless steel with an ABS ceiling and stainless steel floor. Cabinet walls and drawers are insulated with 2” of environmentally friendly, CFC free, foamed in place polyurethane. 6” polyolefin, stem casters (two with brakes) are standard. Preparation tables are supplied with a 48” x 10” x 1/2” thick N.S.F. approved white polyethylene cutting board.

### Drawer Construction

Drawer fronts are constructed of high grade stainless steel inside with stainless steel interior and are insulated with R-134a CFC free foamed in place polyurethane. Each drawer accommodates (1) 1/2 size and (1) 1/3 size pan per drawer, 6” deep (pans by others). Drawer frames are formed of 14 gauge stainless steel and securely fastened in the cabinet.The drawer slides are constructed of heavy duty 16 gauge stainless steel with durable acetal rollers with stainless steel ball bearings to prevent metal to metal contact. The drawer slides have a dynamic load capacity of 175 lbs. and have been life tested (fully loaded) three hundred thousand openings and closings without showing significant wear.The flush mount handles are constructed of extruded aluminum. Snap-in magnetic drawer gaskets are durable and easily removed for cleaning.

### Refrigeration System

Front breathing refrigeration system allows unit to be built into any enclosure with zero side or rear clearance.The high efficiency refrigeration system is self-contained with an enamel coated evaporator for extended life. Condensate removal is accomplished with an energy efficient non-electric evaporation system. A capillary tube controls the flow of environmentally friendly R-134a refrigerant through the evaporator. Refrigeration system utilizes a heated defrost to eliminate any ice on the evaporator coil.An innovative air distribution system distributes air evenly around the pans. Engineered to maintain NSF-7 temperatures in 100°F ambient. (Certified to NSF-7 temperatures in 86°F ambient.) Preparation tables are supplied with a full complement of N.S.F. approved plastic 1/6 size pans, 4” deep and stainless steel adapter bars. Units will also accommodate 6” deep pans. Pans are located 1.5” below the top to keep food product within easy reach. 115 volt units are equipped with an eight foot cord and NEMA rated plug (20.0 amps or less).

Printed in the U.S.A.