CRMR60(-8/-12/-16)

Commercial Series Sandwich Top Refrigerators

CRMR60(-8 /-12 /-16)
04/03/17
Item # 13325

Item #: _____

Project: _____

Qty: _____

AIA#: _____

W x D x H
60” x 30” x 45.25”*
*with 6” casters

CRMR60-8

CRMR60-12

CRMR60-16

Dimensions / Capacity	Two Section CRMR60-8/-12/-16
Interior Storage Capacity (CF)	17.55 ft^3
Interior Storage Capacity (CF) (AHAM)	16.6 ft^3
Overall Width x Depth (including 1” bumper)	60” x 31”
Height (including 6” casters)	45.25”
Depth with Cutting Board Installed	30.7”
Door Opening Width x Height	25.5” x 23”
Depth with Door Open at 90º (including 1” bumper)	58.5”
Adjustable Shelves	2
Shelf Dimensions (W x D)	22” x 16”
Pan Capacity (# of 1/6 size x 4” deep)	8 /12 /16
Maximum Pan Depth	6”
Crated Weight	323 lbs.
Crated Width x Depth x Height	64.5” x 34” x 45.75”

Electrical / Refrigeration	Two Section CRMR60-8/-12/-16
Voltage	115/60/1
HACR Breaker	15.0 Amps
Electrical Connection (NEMA)	5-15P
Voltage Range	104-126
Ambient Temp. Range	45° to 100°F
Control Setpoint Range	32° to 52°F
Amperage	5.5
Energy Consumption (kWh/day) @NSF	4.2
Heat Rejection (BTU/Hr.) @NSF	596.5
Approx. Nominal Compres. BTU/HR (HP)	2607(1/3HP)
Refrigerant / Charge Amount (oz)	R-134a (10.3 oz)

Options

- ☐ 2.25” Casters
- ☐ 4” Casters
- ☐ Stainless steel lift off covers
- ☐ Stainless steel back
- ☐ Large pan adapter bars
- ☐ Overshelves

Warranty

* 3 Year - parts and Labor on entire machine.
5 Year - Parts on Compressor

Valid in United States, Canada, Puerto Rico and U.S. Territories. Contact factory for warranty in other countries.

Features

- **Engineered to maintain NSF-7 temperatures in 100°F ambient. (Certified to NSF-7 temperatures in 86°F ambient.)**
- **Stainless steel exterior front, sides and top**
- **Stainless steel interior sides and back with stainless steel interior floor**
- Cabinet and doors are insulated with 2” CFC free, foamed in place polyurethane
- Exclusive “stepped” door design to protect door gasket
- Spring assisted self-closing doors with stay open feature
- Extruded aluminum flush mount door handle
- Field reversible doors
- Magnetic door gasket is easily removable for cleaning
- Front breathing air flow design
- Innovative air distribution system distributes air evenly to maintain product temperature
- Provided with a full complement of polycarbonate plastic 1/6th size pans, 4” deep
- Rails will also accept 6” deep pans for 50% more pan volume
- 60” x 10” x 1/2” thick white polyethylene cutting board is standard
- Enamel coated evaporator coil
- One epoxy coated shelf per section is standard
- Anodized aluminum shelf supports adjustable in 1/2” increments
- Standard with 6” casters (two with brakes)
- Three year parts and labor warranty
- Five year compressor warranty
- 8 ft. cord and plug

Printed in the U.S.A.

Hoshizaki reserves the right to change specifications without notice.

CRMR60(-8/-12/-16)

Commercial Series Sandwich Top Refrigerators

CRMR60(-8 /-12 /-16)
04/03/17
Item # 13325

FRONT VIEW

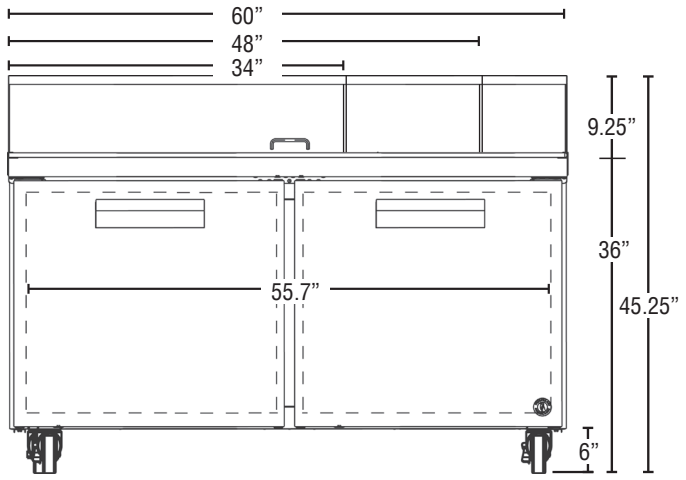

CRMR60 (-8/-12/-16)

SIDE VIEW

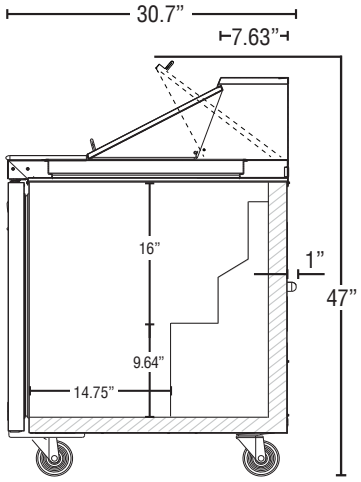

CRMR60 (-8/-12/-16)

PLAN VIEW

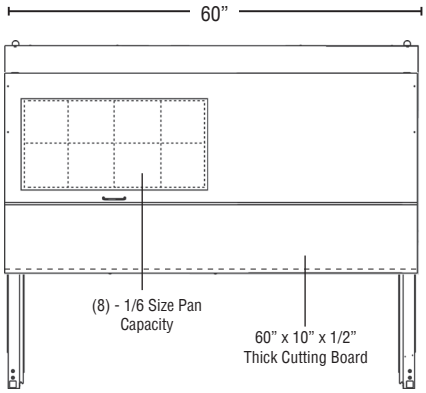

CRMR60-8

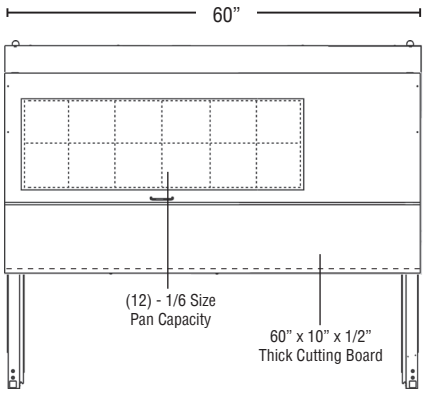

CRMR60-12

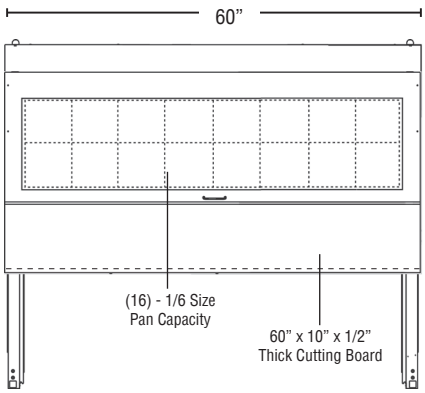

CRMR60-16

Cabinet Construction

The exterior cabinet top, front, and sides, are constructed of high quality stainless steel. Cabinet is provided with a stainless steel top enclosure and an easily removable stainless steel insulated lift-up cover. The exterior back and bottom are constructed of coated steel. The cabinet interior back and sides are stainless steel with an ABS ceiling and stainless steel floor. One heavy duty epoxy coated shelf per section is standard. Mounted on anodized aluminum pilasters the shelf is adjustable in 1/2” increments. Cabinet walls and doors are insulated with 2” of environmentally friendly, CFC free, foamed in place polyurethane. 6” polyolefin, stem casters (two with brakes) are standard. Preparation tables are supplied with a 60” x 10” x 1/2” thick N.S.F. approved white polyethylene cutting board.

Door Construction

Doors are constructed of high grade stainless steel exterior with an ABS interior liner. Hoshizaki’s exclusive “stepped” design protects the gasket while product is removed from the cabinet. Doors are provided with a one piece, extruded aluminum, flush mount handle. Spring assisted self-closing doors are equipped with a stay open feature past 90 degrees. Snap-in magnetic door gaskets are durable and easily removed for cleaning. Field reversible door hinging is standard.

Refrigeration System

Front breathing refrigeration system allows unit to be built in to any enclosure with zero side or rear clearance. The high efficiency refrigeration system is self-contained with an enamel coated evaporator for extended life. Condensate removal is accomplished with an energy efficient non-electric evaporation system. A capillary tube controls the flow of environmentally friendly R-134A refrigerant through the evaporator. Refrigeration system utilizes an electric time-initiated defrost to eliminate any ice on the evaporator coil. An innovative air distribution system distributes air evenly around the pans. Engineered to maintain NSF-7 temperatures in 100°F ambient. (Certified to NSF-7 temperatures in 86°F ambient.) Preparation tables are supplied with a full complement of N.S.F. approved polycarbonate plastic 1/6th size pans, 4” deep and stainless steel adapter bars. Units will also accommodate 6” deep pans. Pans are located 1.5” below the top to keep food product within easy reach. 115 volt units are equipped with an eight foot cord and NEMA rated plug (20.0 amps or less).

Printed in the U.S.A.