ISSUED:	FEB. 29, 2000
REVISED:	APR. 25, 2005

HOSHIZAKI
WATER ELECTROLYZER

MODEL ROX-20TA-U

INSTRUCTION MANUAL

IMPORTANT

Only qualified service technicians should attempt to install, service or maintain this water electrolyzer. No installation, service or maintenance should be undertaken until the technician has thoroughly read this Instruction Manual. Likewise, the owner/manager should not proceed to operate the water electrolyzer until the installer has instructed them on its proper operation.

HOSHIZAKI provides this manual primarily to assist qualified service technicians in the installation, maintenance and service of the water electrolyzer.

Should the reader have any questions or concerns which have not been satisfactorily addressed, please call or write to the HOSHIZAKI Technical Support Department for assistance.

HOSHIZAKI AMERICA, INC.
618 Highway 74 South
Peachtree City, GA 30269

Attn: HOSHIZAKI Technical Support Department

Phone: 1-800-233-1940 Technical Service
(770)487-2331
Fax: (770)487-3360

Note: To expedite assistance, all correspondence/communication MUST include the following information:

* Model Number
* Serial Number
* Complete and detailed explanation of the problem

* Please review this manual. It should be read carefully before the water electrolyzer is installed and operated. Only qualified service technicians should install, service and maintain the water electrolyzer. This manual should be made available to the technician prior to installation, maintenance or service.

* Keep this manual with the water electrolyzer for later reference.

CONTENTS

PAGE

I. SPECIFICATIONS

1. NAMEPLATE RATING

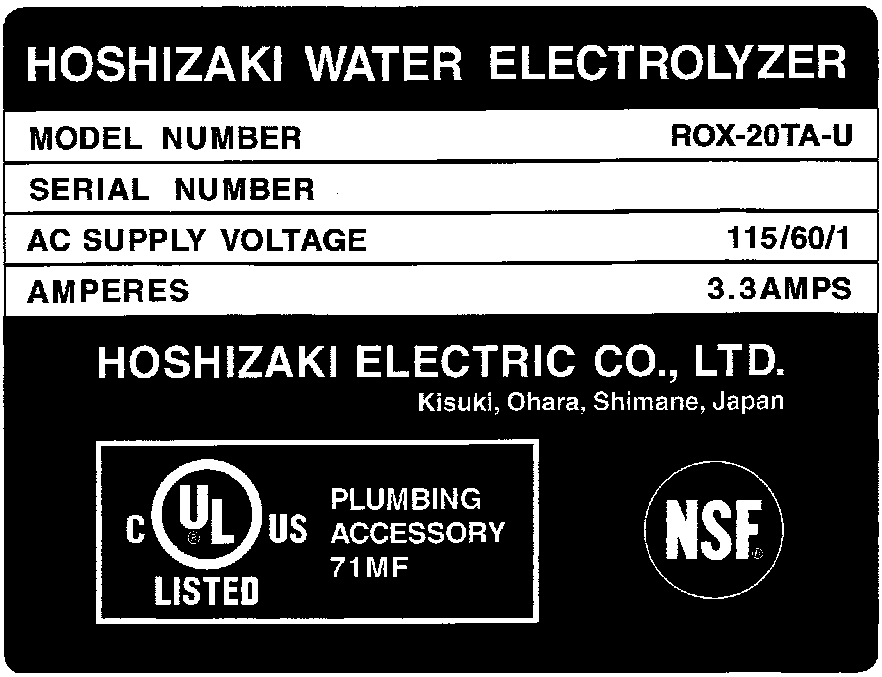

See the Nameplate for electrical specifications. This Nameplate is located on the lower right hand side of the Rear Panel.

2. DIMENSIONS/CONNECTIONS

Unit: inch (mm)

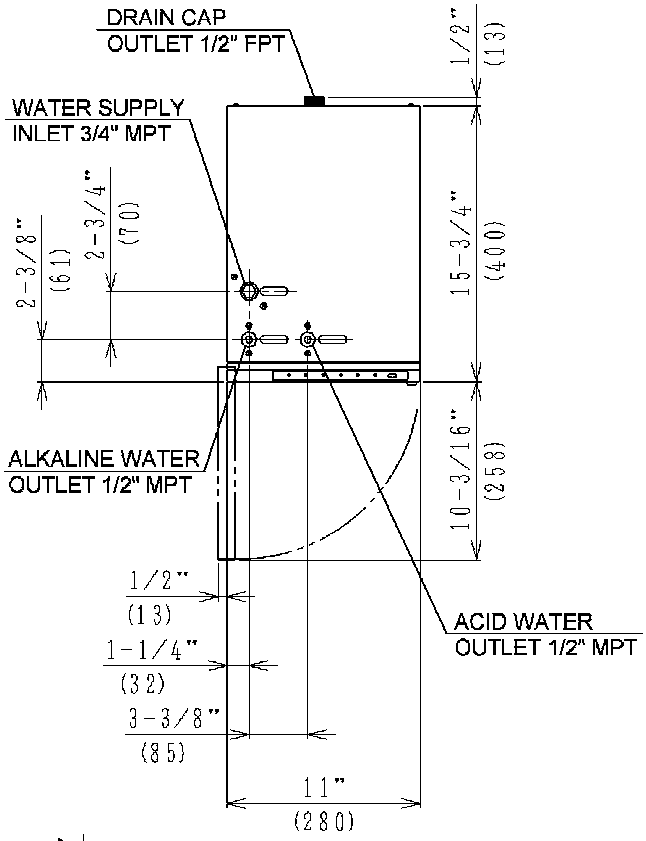

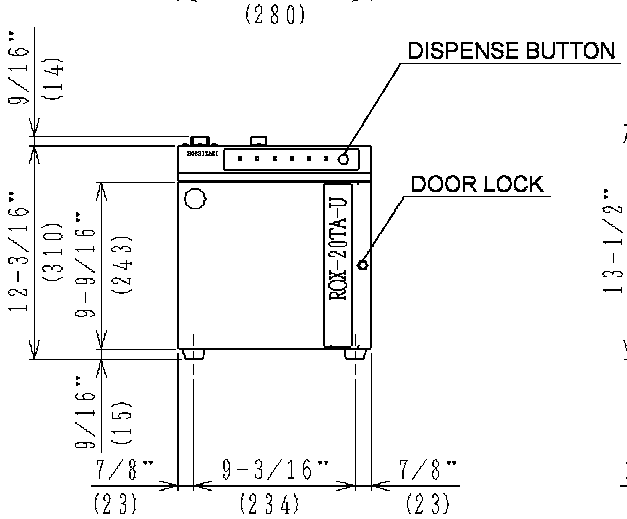

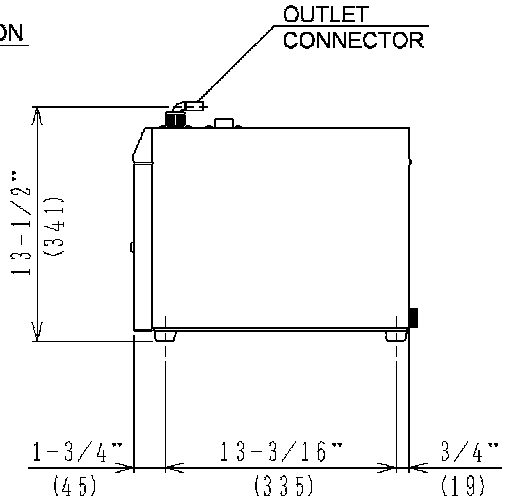

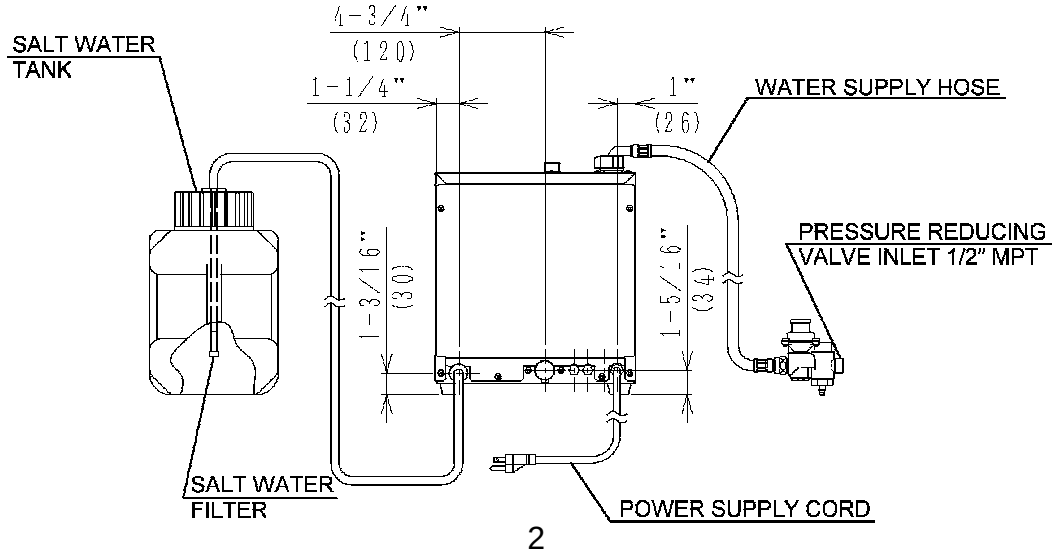

II. CONSTRUCTION

1. GENERAL

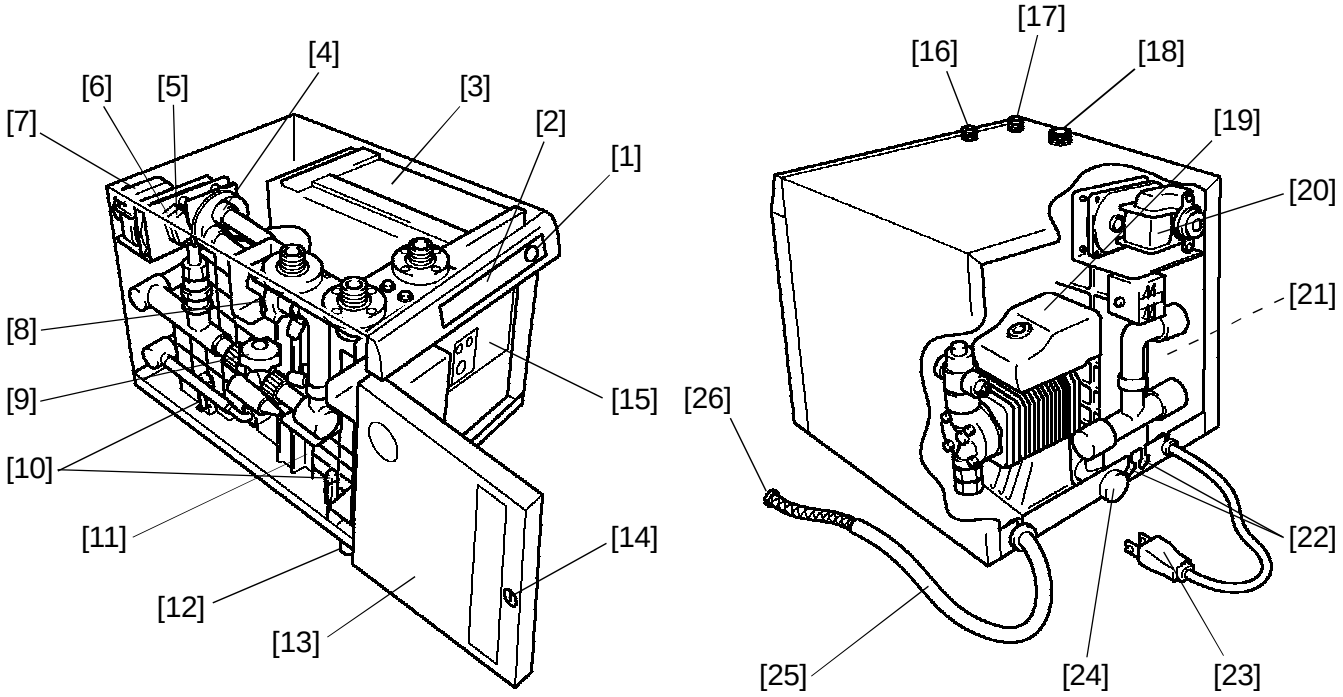

[1] Display Panel
See “II. 3. DISPLAY PANEL“.

[2] Lamp Board
Board with lamps indicating unit status.

[3] Control Box
See “II. 4. CONTROL BOX”.

[4] Flow Switching Valve
Changes the flow direction of electrolytic water.

[5] Microswitch [Direction]
Senses the direction of the Flow Switching Valve.

[6] Microswitch [Location]
Senses the location of the Flow Switching Valve.

[7] Gear Motor
Rotates the Impeller inside the Flow Switching Valve.

[8] Water Valve
Supplies potable water to the Electrolytic Cell.

[9] Flow Rate Sensor
Senses potable water flow.

[10] Surge Absorber
Interrupts a temporary voltage surge.

[11] Electrolytic Cell
Electrolyzes diluted salt water and generates acid and alkaline water.

[12] Leg
Not adjustable.

[13] Door
Provided with Door Lock.
[14] Door Lock
Locks the Door.
[15] Control Panel
See “II. 2. CONTROL PANEL”.
[16] Acid Water Outlet
Dispenses acid water during the normal operation and alkaline water during the flushing process.
[17] Alkaline Water Outlet
Dispenses alkaline water during the normal operation and acid water during the flushing process.
[18] Water Supply Inlet
Inlet for potable water supplied to the unit.
[19] Electromagnetic Metering Pump
Supplies salt water to the unit.
[20] Terminal Block
Used when the Water Tank (sold separately) is installed.
[21] Rear Panel (not shown)
Removed when the Water Tank Float Switches are connected to the Terminal Block or the Remote Controller is connected to the Control Box.
[22] Blind Bushing
Removed when the Water Tank Float Switches are connected to the Terminal Block or the Remote Controller is connected to the Control Box.
[23] Power Supply Cord
Flexible cord with a grounding conductor and grounding type attachment plug.
[24] Drain Cap
Used for draining the pipes.
[25] Salt Water Hose
Made of PVC.
[26] Salt Water Filter
Removes foreign substances in salt water.

2. CONTROL PANEL

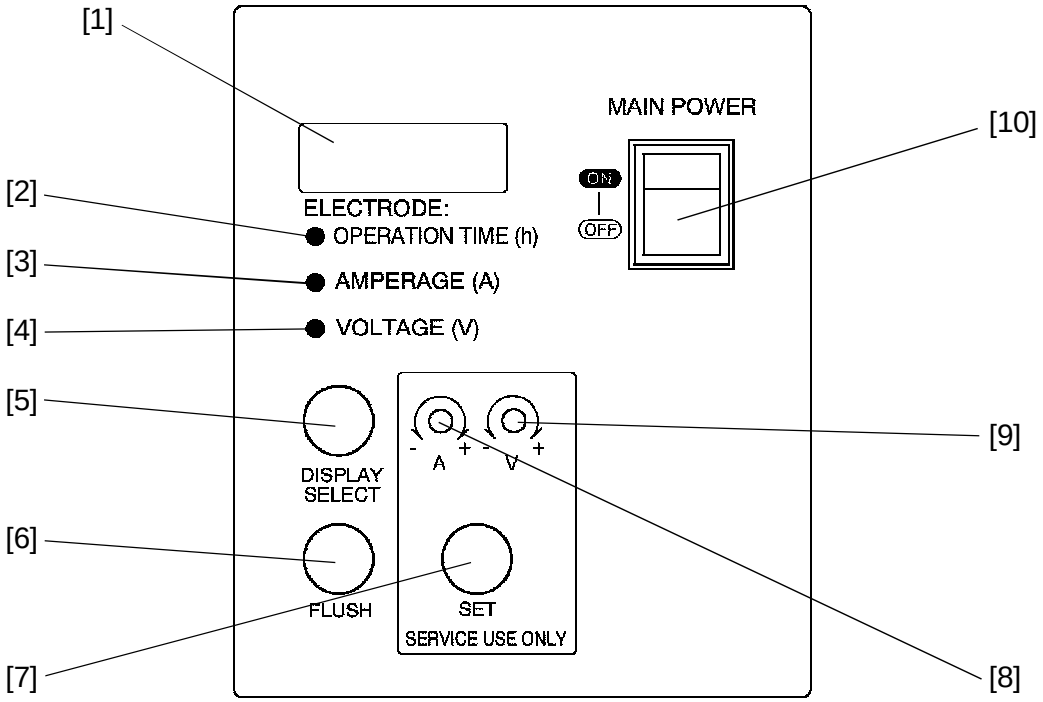

[1] Display Window
Displays the operation time, amperage or voltage during the normal operation and error codes in case of trouble.

[2] Operation Time Lamp
Display Window displays operation time (h) when this lamp is on.

[3] Amperage Lamp
Display Window displays amperage (A) when this lamp is on.

[4] Voltage Lamp
Display Window displays voltage (V) when this lamp is on.

[5] Display Select Button
Switches the display of the Display Window.

[6] Flush Button
Functions as a switch to flush the pipes beyond the acid and alkaline water outlets.

[7] Set Button
Only qualified service personnel or installer may press this button to adjust various set values.

[8] Amperage Control Volume
Only qualified service personnel may turn this control to change the set amperage.

[9] Voltage Control Volume
Only qualified service personnel may turn this control to change the set voltage.

[10] Power Switch
Turns the unit On and Off.

3. DISPLAY PANEL

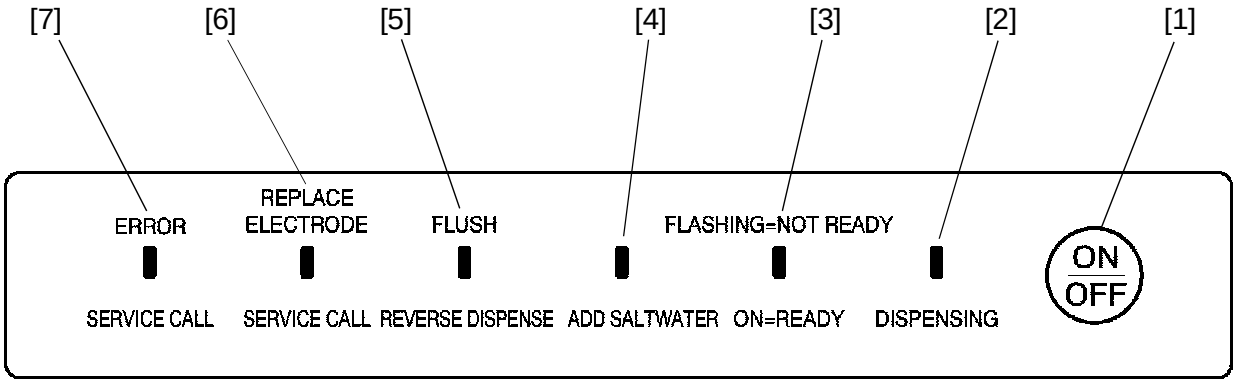

[1] Dispense Button
Starts and stops dispensing electrolytic water.

[2] Dispensing Lamp (Green)
Indicates that the unit is producing water.

[3] Ready Lamp (Green)
Flashes until the desired settings are achieved and stays on when the unit is dispensing electrolytic water.

[4] Add Salt Water Lamp (Red)
Indicates that the Salt Water Tank level is too low.

[5] Flush Lamp (Red)
Stays on during the flush operation. Indicates that the unit is in flush cycle.

[6] Electrolytic Cell Replace Lamp (Red)
Indicates that the cell life is near completion. Flashes continuously from 2900 hours to 3000 hours and stays on after 3000 hours.

[7] Service Call Lamp (Red)
Indicates that there is trouble detected.

4. CONTROL BOX

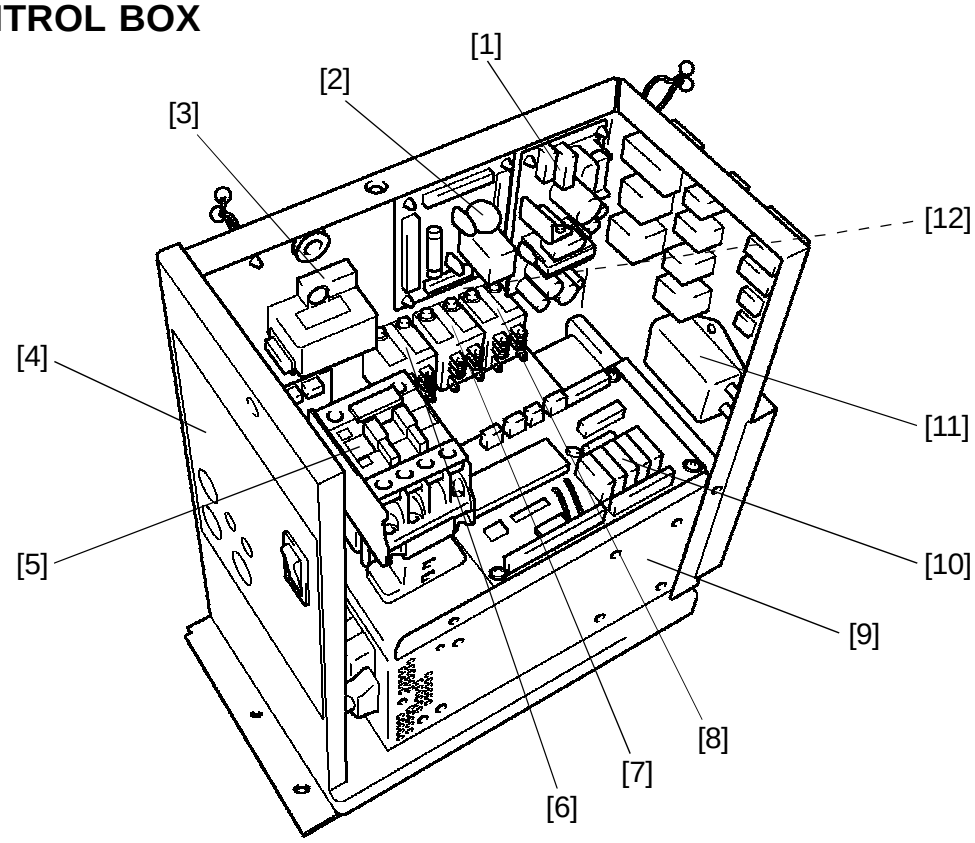

[1] Switching Regulator
Supplies power to start the Programmable Controller, etc.
[2] Noise Board
Board to remove noise in the unit.
[3] Current Sensor
Reads amperage in the Electrolytic Cell.
[4] Operation Board
Board with switches to operate the Control Panel, etc.
[5] Magnetic Contactor
Switches polarity of the Electrolytic Cell.
[6] Relay 1
For [10] DC Power Supply.
[7] Relay 2
Controls the water level in the Water Tank.
[8] Relay 3
Switches the electrolytic water display of the Remote Controller.
[9] DC Power Supply
Power supply for cells to generate electrolytic water.
[10] Programmable Controller
Manages all controls of the unit.
[11] Noise Filter
Removes noise from 1. [19] Electromagnetic Metering Pump.
[12] Ferrite Core (not shown)
Removes noise in the unit.

5. REMOTE CONTROLLER (OPTION)

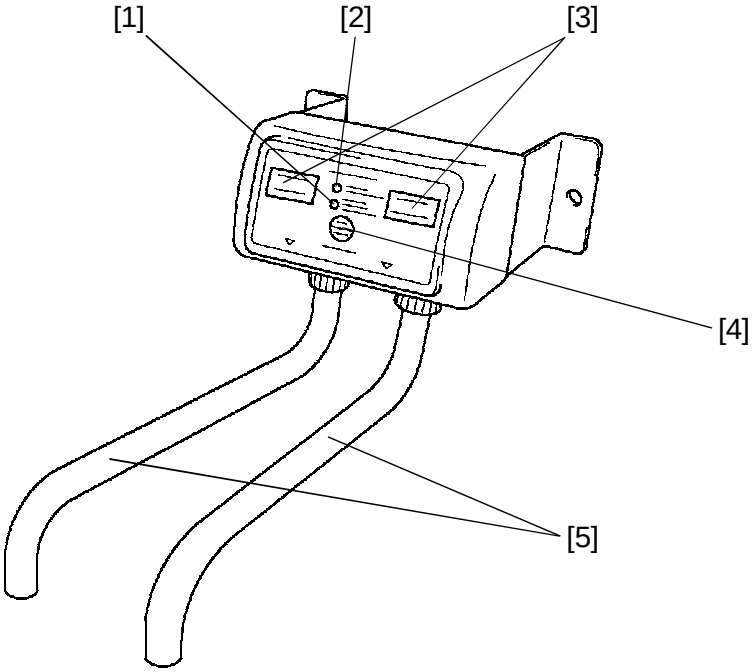

[1] Ready Lamp (Green)
Flashes until the desired settings are achieved and stays on when the unit is dispensing electrolytic water.

[2] Add Salt Water Lamp (Red)
Indicates that the Salt Water Tank level is too low.

[3] Electrolytic Water Lamp (Green)
The upper lamps will function during the normal operation. Alkaline water is dispensed from the left outlet and acid from the right. The lower lamps will function during the flush operation only. Acid water is dispensed from the left outlet and alkaline water from the right.

[4] Dispense Button
Starts and stops dispensing electrolytic water.

[5] Electrolytic Water Outlet
Transports electrolytic water.

6. WATER TANK FLOAT SWITCHES (OPTION)

Includes the Upper and Lower Acid Water Tank Level Float Switches and Upper and Lower Alkaline Water Tank Level Float Switches.

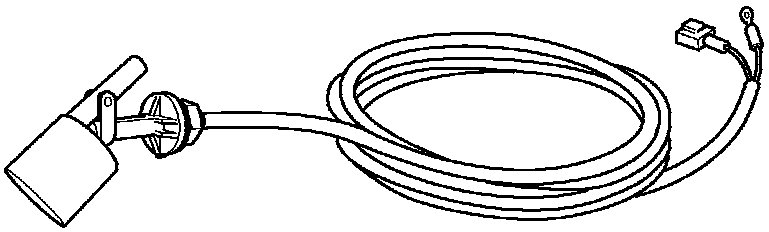

7. OUTLET VALVES (OPTION)

Connected with the Electrolytic Water Outlets (for acid and alkaline water outlets) on the Water Tank. Use as needed.

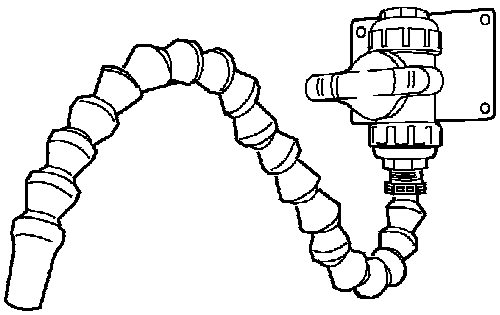

8. ACCESSORIES

Connectors

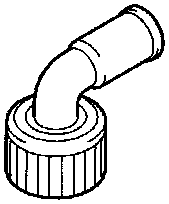

pH Testers

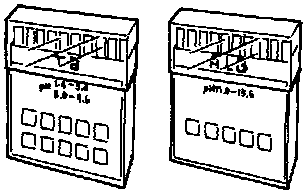

Chlorine Tester

Instruction Manual

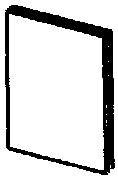

Instruction Sheet

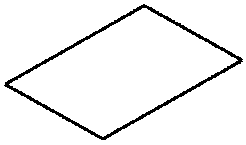

Cap

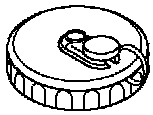

Gaskets

Pressure Reducing Valve

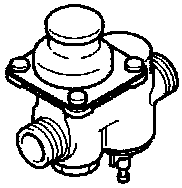

Water Supply Hose

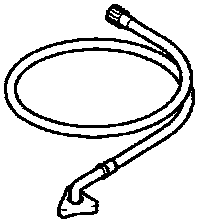

Braided Hoses

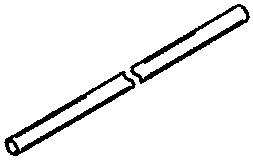

Salt Measuring Cup

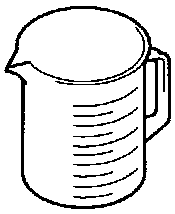

Salt Water Tank

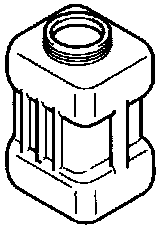

Clamps

III. INSTALLATION AND OPERATING INSTRUCTIONS

1.CHECKS BEFORE INSTALLATION

IMPORTANT

1. Remove shipping carton and tape(s). If packaging material is left in the water electrolyzer, it will not work properly.

2. Use potable water. If water other than potable water is used, it may clog pipes, cause poor performance, etc.

3. Purchase either the Remote Controller (Option) or Water Tank Float Switch (Option).

4. Install a water softener and water filter (sold separately) on the water electrolyzer to improve machine performance and prevent electrolytic cell damage, etc.

1) Be sure not to damage the panels when installing the water electrolyzer.

2) Remove the package containing the accessories.

3) See the Nameplate on the Rear Panel and check that the voltage supplied corresponds with the voltage specified on the Nameplate.

2. HOW TO REMOVE PANELS

a) Rear Panel --------- Remove the screws.
Lift off slightly and pull toward you.

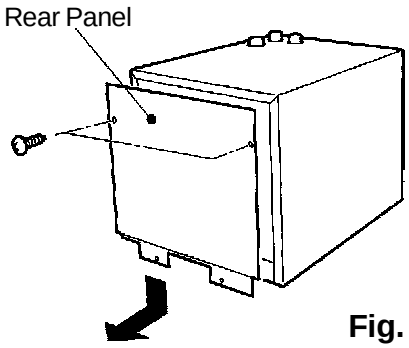

Fig. 2

3. LOCATION

WARNING

1. This water electrolyzer is not intended for outdoor use. Normal operating ambient temperature should be within +40°F to 95°F (+5°C to +35°C); Normal operating water temperature should be within +40°F to 85°F (+5°C to +30°C). Operation of the water electrolyzer for extended periods outside of these normal temperature ranges may affect performance.

2. Do not install the unit where exposed to humidity or splashing water. Reduction in insulation property may cause an electric leak or shock. Locations should be at least 6” above the floor to avoid splashing water during kitchen cleaning operations.

3. Install adequate ventilating system. Hydrogen gas or chlorine gas may cause health problems.

CAUTION

1. To prevent damage to the unit, do not move the unit with the Door open.

2. The unit should not be submerged in water or become wet.

3. Use glass, plastic or stainless steel containers for electrolytic water. Acid water may corrode metal.

For best operating results:

* The water electrolyzer should not be located next to ovens, grills or other high heat producing equipment.

* Location should provide a firm and level foundation for the equipment.

* Allow 6” clearance at rear, sides and top for proper performance and ease of maintenance and/or service.

* Install the unit in a well-ventilated area. Use fans with diameter over 6 inches (standard air flow rate: 270ft^3/min (450m^3/h)) if necessary.

4.ELECTRICAL CONNECTION

WARNING

1. This water electrolyzer must have a separate power supply or receptacle of proper capacity. Branching off the Power Cord, using an extension cord or sharing a single power supply with other appliances may result in an electric shock, heat generation or fire.

2. The water electrolyzer requires a ground that meets the national and local electrical code requirements. To prevent possible electrical shock to individuals or extensive damage to equipment, plug the electrolyzer only into a properly grounded electrical outlet.

CAUTION

The maximum allowable voltage variation should not exceed ±10 percent of the rated voltage. Operation of the unit outside of this range may cause damage to the unit or reduction of the performance.

* Usually an electrical permit and services of a licensed electrician are required.

5. INSTALLATION OF WATER SOFTENER (SOLD SEPARATELY) AND WATER FILTER (SOLD SEPARATELY)

[a] CHECKS BEFORE INSTALLATION

1) Unpack and remove shipping carton, tape(s) and other packaging material(s).

2) Check that all the necessary accessories are included.

3) Follow the Instruction Manual for the Water Softener and the Water Filter.

[b] LOCATION

* Install the Water Softener and Water Filter under the same ambient temperature and water temperature conditions as the water electrolyzer.

* Follow the Instruction Manual for the Water Softener and the Water Filter.

[c] SET UP

1) Install the valves and pipes following the Instruction Manual for the Water Softener and the Water Filter.

2) Install a water pressure gauge on the pipe of the primary side of the Water Softener and secondary side of the Water Filter.

[d] ELECTRICAL CONNECTION

WARNING

1. This softener must have a separate power supply or receptacle of proper capacity. Branching off the Power Cord, using an extension cord or sharing a single power supply with other appliances may result in an electric shock, heat generation or fire.

2. The water softener requires a ground that meets the national and local electrical code requirements. To prevent possible electrical shock to individuals or extensive damage to equipment, plug the water softener only into a properly grounded electrical outlet.

CAUTION

The maximum allowable voltage variation should not exceed ±10 percent of the rated voltage. Operation of the unit outside of this range may cause damage to the unit or reduction of the performance.

* Usually an electrical permit and services of a licensed electrician are required.

[e] WATER SUPPLY AND PLUMBING CONNECTIONS – See Fig. 3

CAUTION

Do not run the Water Softener and the Water Filter until the proper water pressure is reached.

* For piping of the Water Softener and Water Filter, follow the Instruction Manual for the Water Softener and the Water Filter.

* Adjust water pressure so that discharge pressure after pipes are connected will be within 15-115PSIG (0.10-0.78MPa). Also adjust water supply pressure so that it will be within the specified value in the specifications for the Water Softener and the Water Filter (softener is NSF rated at 120PSI and flow of 2gal./min.).

* Install a water pressure gauge on the pipe of the primary side of the Water Softener and secondary side of the Water Filter.

* For air gap between the drain pipe ends or hose ends and a sink or floor drain, follow the Instruction Manual for the Water Softener.

* Be sure to flush out a new water softener thoroughly to a sink or drain before connecting it to the water electrolyzer.

* A plumbing permit and services of a licensed plumber may be required in some areas.

* General piping example for the Water Softener and Water Filter

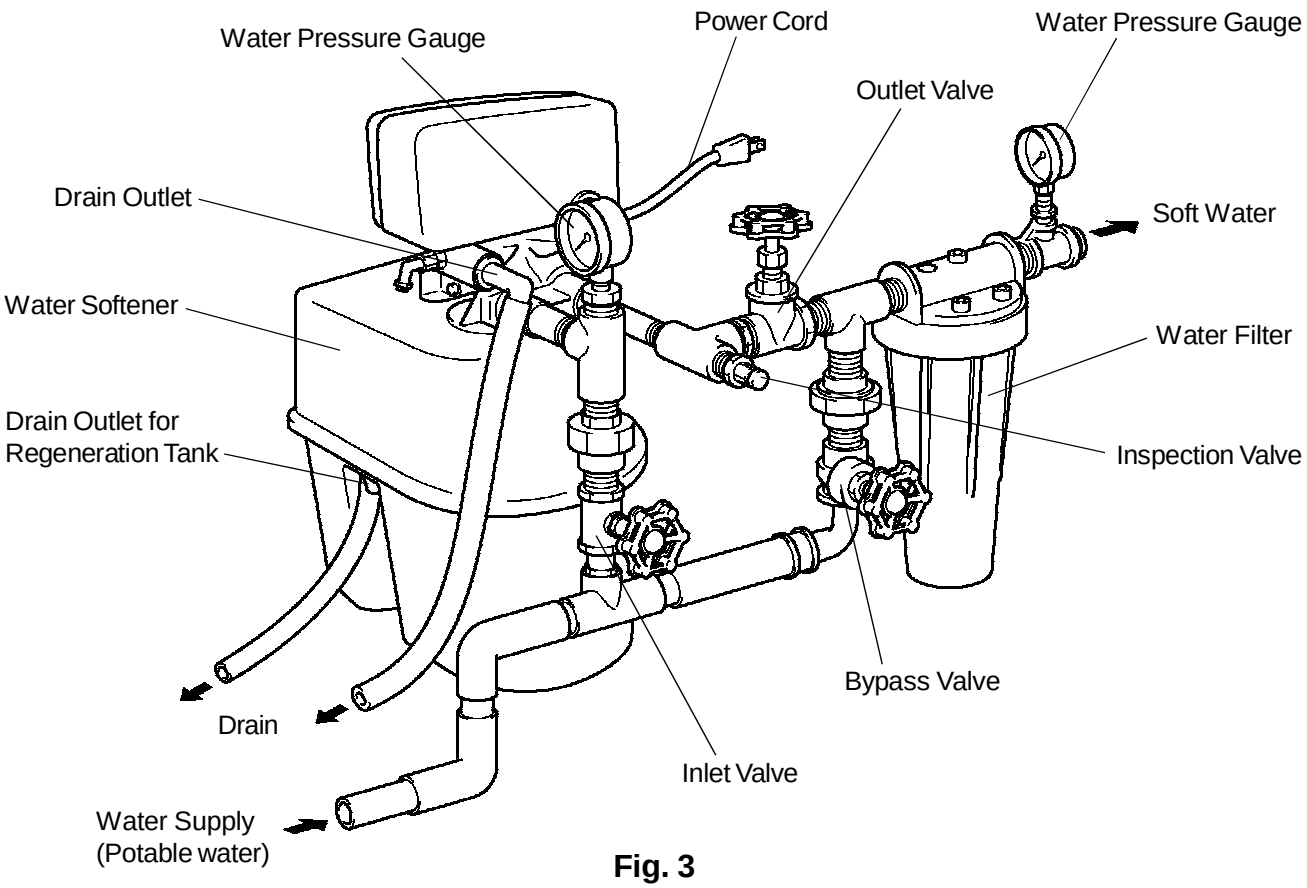

Fig. 3

6. INSTALLATION OF REMOTE CONTROLLER (OPTION)

[a] CHECKS BEFORE INSTALLATION

1) Unpack and remove shipping carton, tape(s) and other packaging material(s).

2) Check that all the necessary accessories are included.

3) Check that the Remote Controller and water electrolyzer are installed so that the cables and connection hoses of the Remote Controller can reach the water electrolyzer.

4) Check if there is any serious damage, broken cable, etc.

[b] LOCATION

WARNING

1. This remote controller is not intended for outdoor use. Normal operating ambient temperature should be within +40°F to 95°F (+5°C to +35°C); Normal operating water temperature should be within +40°F to 85°F (+5°C to +30°C). Operation

of the remote controller for extended periods outside of these normal temperature ranges may affect performance.

2. Do not install the remote controller where exposed to humidity or splashing water. Reduction in insulation property may cause an electric leak or shock.

3. Install an adequate ventilating system. Hydrogen gas or chlorine gas may cause health problems.

CAUTION

1. Avoid a site where dripping is not allowed. Condensation may form on the exterior in high humidity and could drip onto the floor.

2. Use glass, plastic or stainless steel containers for electrolytic water. Acid water may corrode metal.

For best operating results:

* The Remote Controller should not be located next to ovens, grills or other high heat producing equipment.

* Location should provide a firm and level foundation for the equipment.

* Install the unit in a well-ventilated area. Use fans with diameter over 6 inches (standard air flow rate: 270ft^3/min (450m^3/h)) if necessary.

[c] SET UP

CAUTION

Use the Accessory Braided Hoses, Connectors and Gaskets for electrolytic water piping. Other materials may cause corrosion and water leakage.

1) Secure the Remote Controller to the Bracket with M4 x 8 Tapping Screws (Accessory) as shown in the illustration. See Fig. 4.

2) Attach the PVC Braided Hose to the Connector with the Clamp. See Fig. 5.

3) Attach the Connectors to the water electrolyzer with the Gaskets between the Connectors and the water electrolyzer. Make sure to check the connection locations for the Acid and Alkaline Water Hoses. See Fig. 6.

4) Drive M6 anchor bolts into the wall or attach a sheet metal part to the wall to attach the

Bracket. The space between bracket holes is 7” and there are two 8mm holes.

5) Attach the Electrolytic Water Pipes to the Remote Controller after the Remote Controller is installed on the wall. Make sure that there are Gaskets on the end of the Pipes.

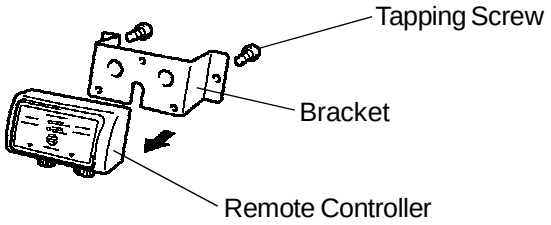

Fig. 4

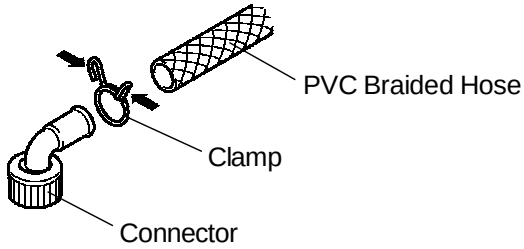

Fig. 5

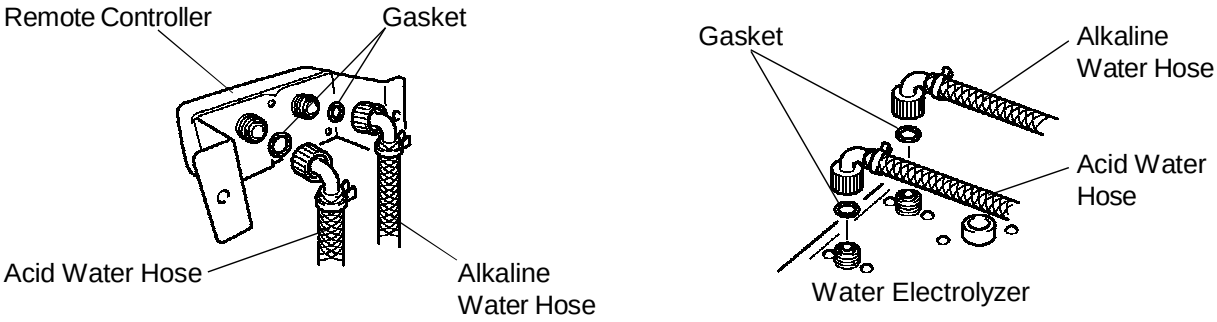

Fig. 6

Note: The vertical height of the hoses for electrolytic water should be a maximum of 80” and the total piping length should be within the range that the PVC Braided Hose can reach. The electrolytic water may not be able to flow or the flow rate may not be maintained if the total piping length is outside this range. Adjust the pipe length using the PVC Braided Hose to maintain the proper performance of the electrolytic water. Install the Remote Controller so that the outlets are located above the unit. The difference in the gas amount between acid water and alkaline water may change the flow rate balance and cause poor performance.

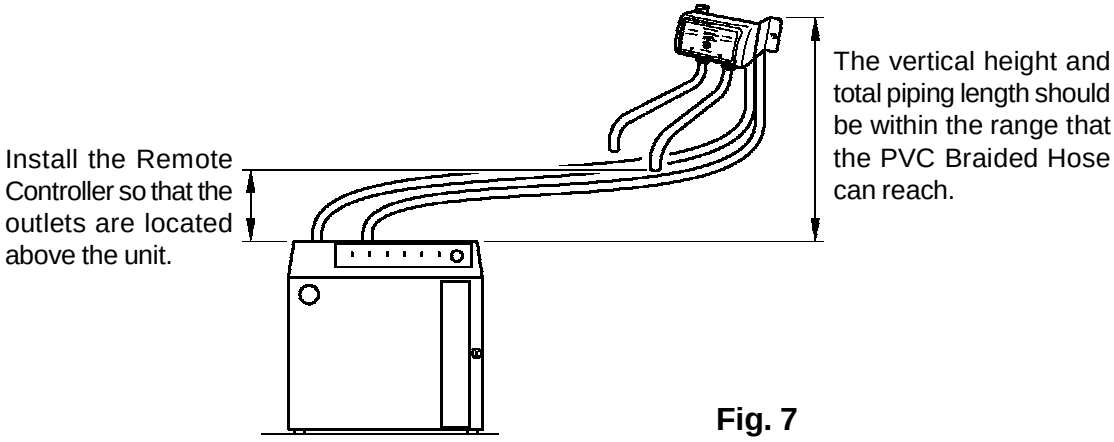

Fig. 7

6) Attach the caution label (Accessory) in readily visible position near the Remote Controller.

[d] ELECTRICAL CONNECTION

* Usually an electrical permit and services of a licensed electrician are required.

1) Remove the Rear Panel. See “III. 2. HOW TO REMOVE PANELS“.

2) Connect the cable connector on the Remote Controller with the 8P connector on the back of the Control Box. See Fig. 8.

3) Remove one blind bushing from the unit base and attach the cable to the unit base using the bushing on the Remote Controller. See Fig. 9.

4) Replace the Rear Panel in the original position with screws.

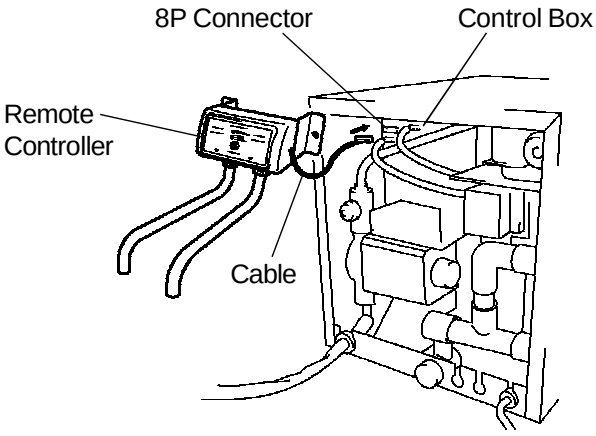

Fig. 8

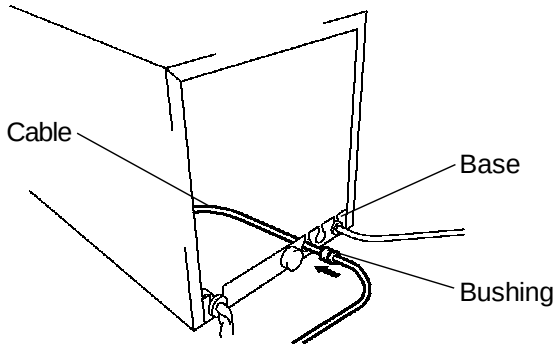

Fig. 9

7. INSTALLATION OF WATER TANK FLOAT SWITCHES (OPTION) AND WATER TANK (SOLD SEPARATELY)

[a] CHECKS BEFORE INSTALLATION

1) Unpack and remove shipping carton, tape(s) and other packaging material(s).

2) Check that all the necessary accessories are included.

3) Check that the water electrolyzer and Water Tank are installed so that the cables of the Float Switches can reach from the water electrolyzer to the Water Tank.

4) A stand may be needed to support the Water Tank depending on the application. Check if the floor can support the weight of the Water Tank when it is full.

5) The Water Tank should have a cover with a small ventilation opening to the atmosphere. The Water Tank should not be exposed to direct sunlight.

[b] LOCATION

WARNING

1. These float switches and water tank are not intended for outdoor use. Normal operating ambient temperature should be within +40°F to 95°F (+5°C to +35°C); Normal operating water temperature should be within +40°F to 85°F (+5°C to +30°C). Operation of the float switches and water tank for extended periods outside of these normal temperature ranges may affect performance.

2. Do not install the float switches and water tank where exposed to humidity or splashing water. Reduction in insulation property may cause an electric leak or shock.

3. Install an adequate ventilating system. Hydrogen gas or chlorine gas may cause health problems.

CAUTION

1. Avoid a site where dripping is not allowed. Condensation may form on the exterior in high humidity and could drip onto the floor.

2. Use glass, plastic or stainless steel containers for electrolytic water. Acid water may corrode metal.

For best operating results:

* The Water Tank should not be located next to ovens, grills or other high heat producing equipment.

* Location should provide a firm and level foundation for the equipment.

* Allow min. 24” clearance at rear, sides and top for ease of maintenance and/or service.

* Install the unit in a well-ventilated area. Use fans with diameter over 6 inches (standard air flow rate: 270ft^3/min (450m^3/h)) if necessary.

[c] SET UP

CAUTION

Use the PVC Braided Hoses, Connectors and Gaskets or PVC pipes for electrolytic water piping. Other materials may cause corrosion and water leakage.

1) Drill two attachment holes each in the Acid Water Tank and Alkaline Water Tank to attach the Float Switches.

   Note: The diameter of the attachment hole for the Float Switches is 9/16". The minimum vertical distance between two attachment holes is 2-1/2". See Fig. 10.

2) Remove the fitting nut from each Float Switch.

3) Follow the Label on each Float Switch. Place the Float Switch in each tank and pull the cable through the 2 holes out of the tank. Then place the fitting nut back on the cable and secure the Float Switch to the tank.

   Note: Be sure to check the direction of the Float Switch. See Fig. 11.

4) Secure each water tank with a belt, framing or other securing device so that it will not tip or fall.

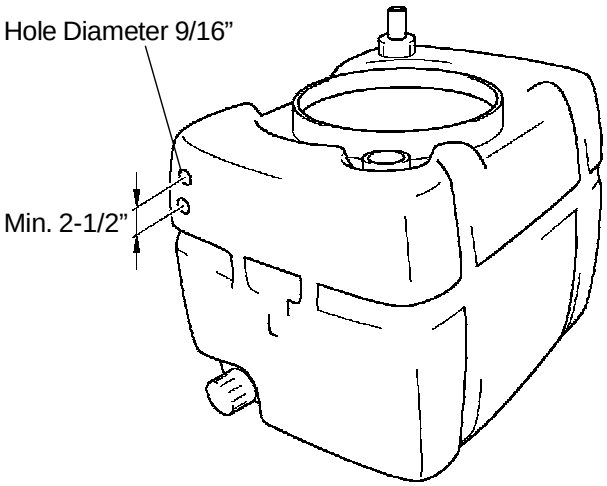

Fig. 10

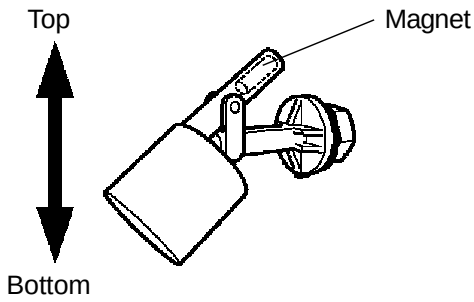

Fig. 11

[d] ELECTRICAL CONNECTION

* Usually an electrical permit and services of a licensed electrician are required.

1) Remove the Rear Panel. See "III. 2. HOW TO REMOVE PANELS".

2) Remove the plastic cover of the Terminal Block located under the Gear Motor inside the unit.

3) Connect the Connectors attached to the Float Switches so that the colors of the Connectors match. See Fig. 12.

4) Connect round eyelet contacts to the Terminal Block matching the numbers according to the label on the wires. See Fig. 13.

5) Replace the plastic cover of the Terminal Block in the original position.

6) Remove two blind bushings from the unit base and attach the cables to the unit base using the bushings attached to the Float Switch. See Fig. 14.

Note: Use one bushing for 2 cables.

7) Replace the Rear Panel in the original position with screws.

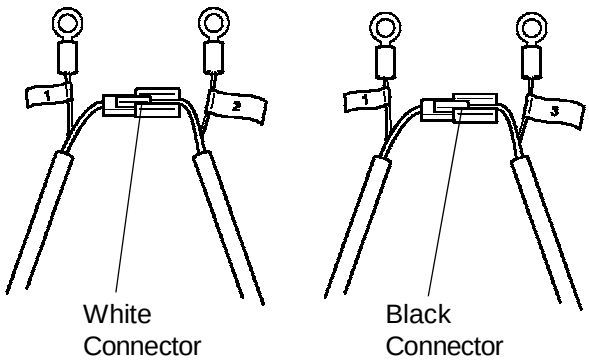

Fig. 12

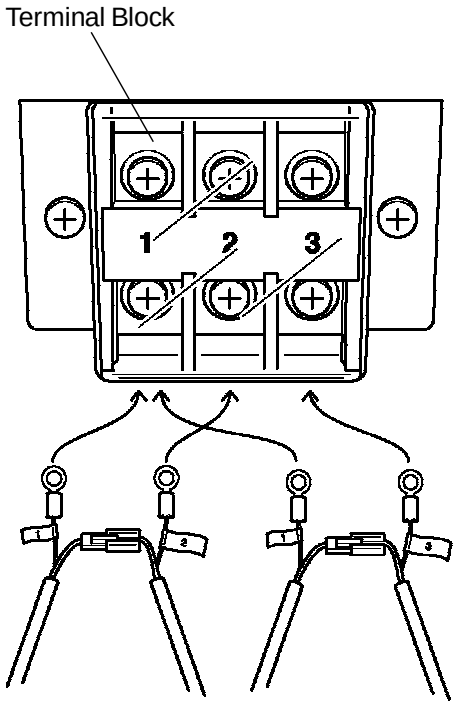

Fig. 13

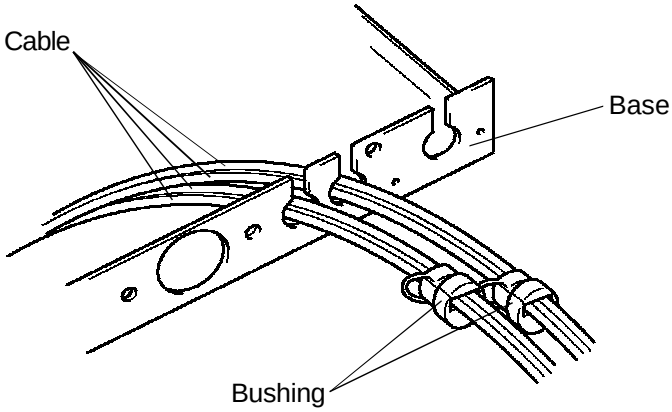

Fig. 14

8. INSTALLATION OF OUTLET VALVES (OPTION)

[a] CHECKS BEFORE INSTALLATION

1) Unpack and remove shipping carton, tape(s) and other packaging material(s).

2) Check that all the necessary accessories are included.

[b] LOCATION

WARNING

1. This outlet valve is not intended for outdoor use. Normal operating ambient temperature should be within +40°F to 95°F (+5°C to +35°C); Normal operating water temperature should be within +40°F to 85°F (+5°C to +30°C). Operation of the outlet valve for extended periods outside of these normal temperature

ranges may affect performance.

2. Install an adequate ventilating system. Hydrogen gas or chlorine gas may cause health problems.

CAUTION

1. Avoid a site where dripping is not allowed. Condensation may form on the exterior in high humidity and could drip onto the floor.

2. Use glass, plastic or stainless steel containers for electrolytic water. Acid water may corrode metal.

For best operating results:

* The Outlet Valves should not be located next to ovens, grills or other high heat producing equipment.

* Location should provide a firm and level foundation for the equipment.

* Install the unit in a well-ventilated area. Use fans with diameter over 6 inches (standard air flow rate: 270ft^3/min (450m^3/h)) if necessary.

[c] SET UP

CAUTION

Use the PVC pipes for electrolytic water piping. Other materials may cause corrosion and water leakage.

1) Choose a dispense method (Water Pump or Water Tank) depending on the installation situation. Install PVC pipes from the Water Tank to the location where electrolytic water is used.

   Note: In case of using a Water Pump, follow the instruction manual for electric wiring and piping.

2) Connect the Valve with the Flexible Pipe.

   Note: Before fitting the Flexible Pipes into the Valves, wrap the pipe threads with sealing tapes.
   Do not misconnect the Accessory Flexible Pipes: Yellow pipe - Acid water
   Blue pipe - Alkaline water
   The Valves are common to both acid and alkaline water.

3) Install the Outlet Valves on the wall using the M4 x 8 Screws (Accessory), etc. depending on the installation condition. Install the Outlet Valves on pipes from each Water Tank. Outlet Valve Inlet is 1/2 Female Pipe Thread (FPT).

Note: When mounting the Valves on a wall surface, locate:
Acid water valve (yellow pipe) on your right
Alkaline water valve (blue pipe) on your left

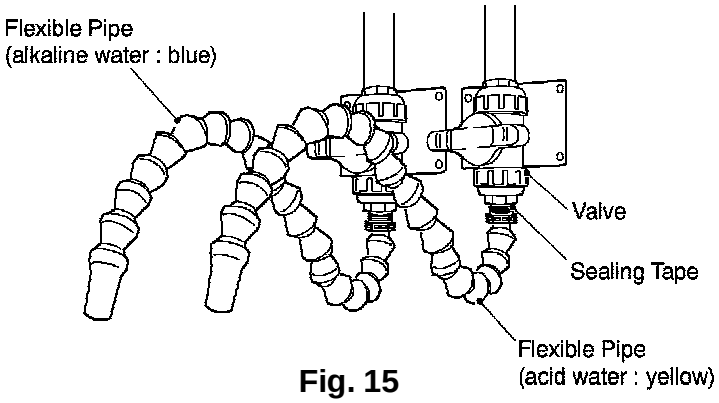

Fig. 15

4) Attach the labels (acid water, alkaline water, and caution) in readily visible positions near the valves.

9. WATER SUPPLY AND PLUMBING CONNECTIONS

[a] UNIT WITH REMOTE CONTROLLER, WATER SOFTENER & WATER FILTER

CAUTION

1. Do not run the water electrolyzer until adequate water pressure (15-115PSIG (0.10-0.78MPa)) is reached.

2. The vertical height of the pipe and total length of the pipes for acid and alkaline water should be the same. Different pipe lengths may cause an unstable amount of acid and alkaline water to be generated, poor performance or damage to the unit.

3. Keep the end of the electrolytic water pipes open. Do not install a shut-off valve on the end of the pipe, connect a hose with the end of the water outlet or immerse the end of the pipe in water. Different pipe lengths may cause an unstable amount of acid and alkaline water to be generated, poor performance or damage to the unit.

4. Pour electrolytic water down a drain after it is neutralized. Putting electrolytic water down a drain without neutralizing it may cause rusty pipes and water leakage.

5. Do not install the unit where there is a possibility of freezing. Remove water from the unit if ambient temperature may fall below 32°F (0°C). Frozen water may damage water supply pipes and cause water leakage.

6. Maintain water supply pressure to the unit within 15-115PSIG (0.10-0.78MPa). Excessively low or high water pressure may cause poor performance of acid and alkaline water, trouble or water leakage from the connections.

* Be sure to install the Pressure Reducing Valve after the Water Filter and Water Pressure Gauge. Pressure Reducing Valve Inlet is 1/2" male pipe thread (MPT). The water electrolyzer will not work properly without the Pressure Reducing Valve.

Note: Be sure to check the direction of the Pressure Reducing Valve. See Fig. 16.

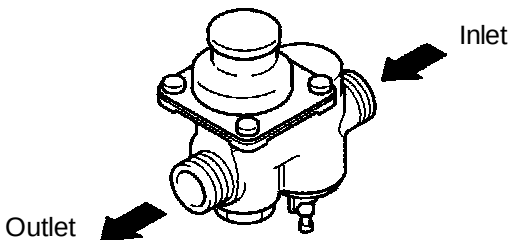

Fig. 16

* Water supply inlet is 3/4" MPT. Connect the unit with the Pressure Reducing Valve using the Water Supply Hose (Accessory).

Note: Place the Gaskets between the Water Supply Hose and unit water supply inlet and the Pressure Reducing Valve and tighten properly. Incomplete connection may cause water leakage. See Fig. 17.

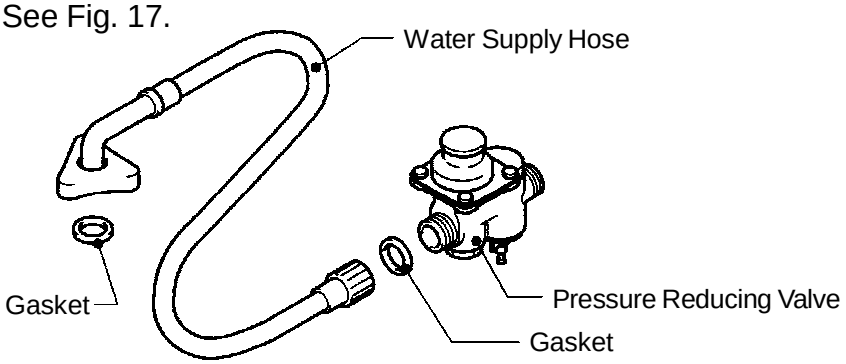

Fig. 17

* Prepare a drain hose with a plastic shut-off valve if water needs to be removed from the unit or water may freeze in the unit in cold areas. Remove the drain cap on the back of the unit and attach the plastic joint, vinyl or PVC hose and plastic shut-off valve. Drain outlet is 3/4" female pipe thread (FPT). See Fig. 18.

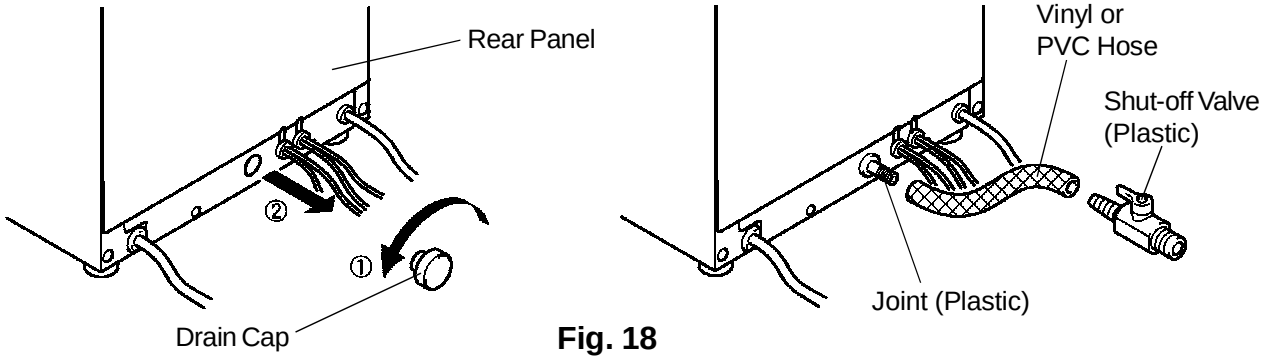

Fig. 18

* Put the Salt Water Hose through the Cap (Accessory) and push in the Salt Water Hose until the Stopper hits the Cap. See Fig. 19.

Note: Install the Remote Controller so that the outlets are located above the Salt Water Filter on the end of the Salt Water Hose. Due to the siphon phenomenon, salt water may leak from the outlets of the Remote Controller if the Remote Controller outlets are not high enough. See Fig. 20.

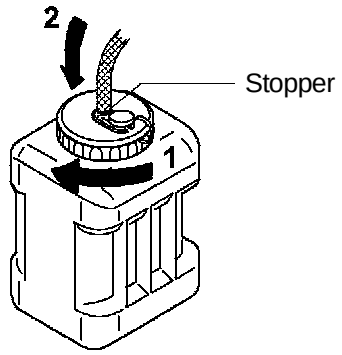

Fig. 19

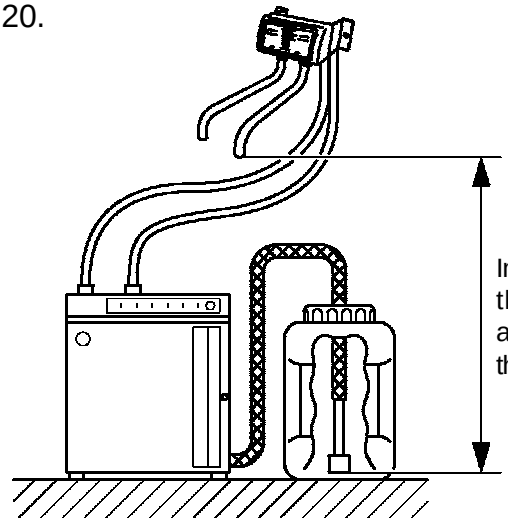

Fig. 20

* A water supply line shut-off valve and drain valve should be installed.

* The drains should not be piped directly to the sewer system. An air gap of a minimum of 2 vertical inches should be between drain pipe ends and the floor drain, the hose ends from the water electrolyzer and the floor drain, and the water supply line drain valve and the floor drain.

* This water elelctrolyzer should be installed in accordance with applicable national, state and local regulations.

* A plumbing permit and services of a licensed plumber may be required in some areas.

* Piping Example

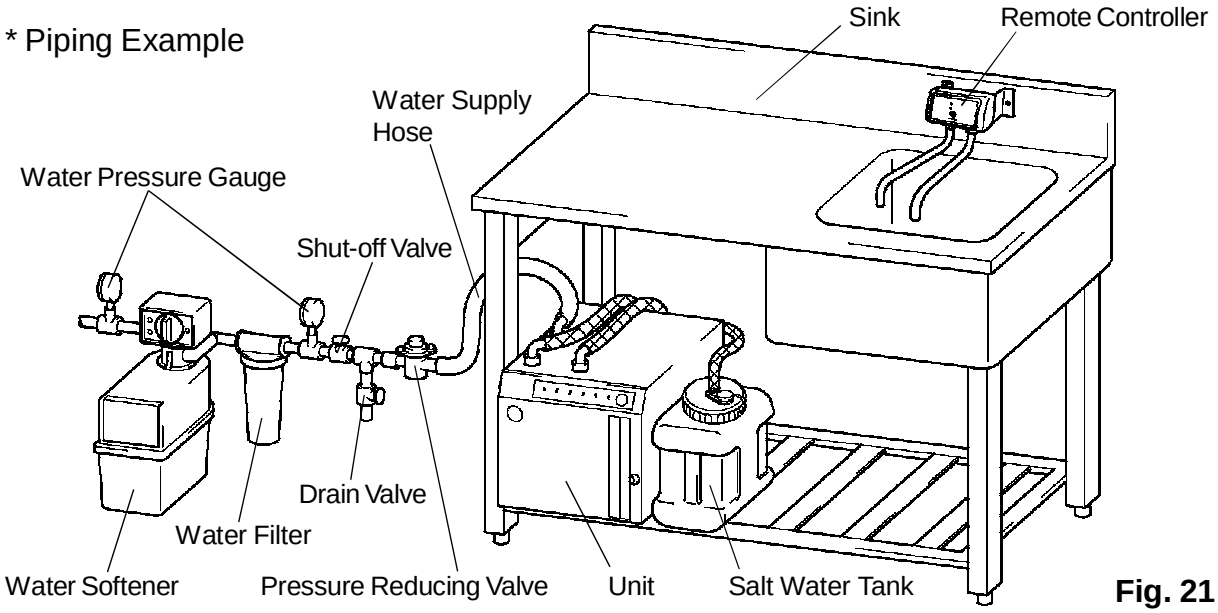

Fig. 21

[b] UNIT WITH WATER TANK, WATER SOFTENER & WATER FILTER

CAUTION

1. Do not run the water electrolyzer until adequate water pressure (15-115PSIG (0.10-0.78MPa)) is reached.

2. The vertical height of the pipe and total length of the pipes for acid and alkaline water should be the same. Different pipe lengths may cause an unstable amount of acid and alkaline water to be generated, poor performance or damage to the unit.

3. Keep the end of the electrolytic water pipes open. Do not install a shut-off valve on the end of the pipe, connect a hose with the end of the water outlet or immerse the end of the pipe in water. Different pipe lengths may cause an unstable amount of acid and alkaline water to be generated, poor performance or damage to the unit.

4. Pour electrolytic water down a drain after it is neutralized. Putting electrolytic water down a drain without neutralizing it may cause rusty pipes and water leakage.

5. Do not install the unit where there is a possibility of freezing. Remove water from the unit if ambient temperature may fall below 32°F (0°C). Frozen water may damage water supply pipes and cause water leakage.

6. Maintain water supply pressure to the unit within 15-115PSIG (0.10-0.78MPa). Excessively low or high water pressure may cause poor performance of acid and alkaline water, trouble or water leakage from the connections.

7. Use the Accessory Braided Hoses, Connectors and Gaskets or PVC pipes for electrolytic water piping. Other materials may cause corrosion and water leakage.

8. Use sealing agents, sealing tape or gaskets to prevent water leakage when connecting pipes.

* Be sure to install the Pressure Reducing Valve after the Water Filter and Water Pressure Gauge. Pressure Reducing Valve Inlet is 1/2” male pipe thread (MPT). The water electrolyzer will not work properly without the Pressure Reducing Valve.

Note: Be sure to check the direction of the Pressure Reducing Valve. See Fig. 22.

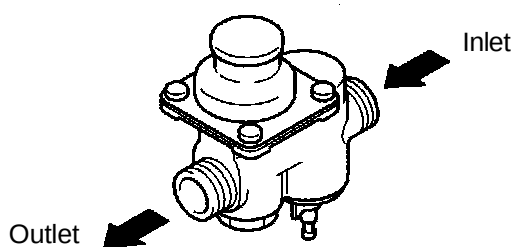

Fig. 22

* Water supply inlet is 3/4” MPT. Connect the unit with the Pressure Reducing Valve using the Water Supply Hose (Accessory).

Note: Place the Gaskets between the Water Supply Hose and unit water supply inlet and the Pressure Reducing Valve and tighten properly. Incomplete connection may cause water leakage. See Fig. 23.

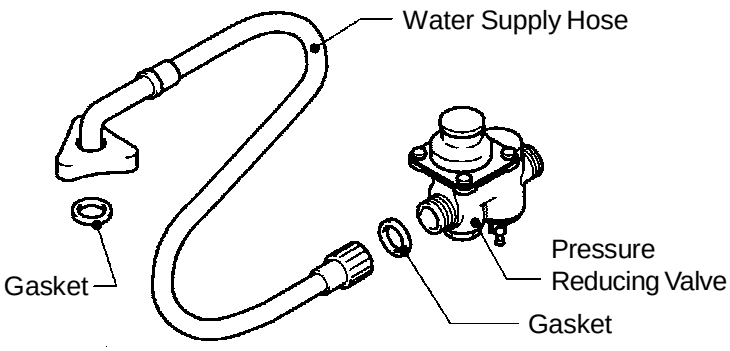

Fig. 23

* Prepare a drain hose with a plastic shut-off valve if water needs to be removed from the unit or water may freeze in the unit in cold areas. Remove the drain cap on the back of the unit and attach the plastic joint, vinyl or PVC hose and plastic shut-off valve. Drain outlet is 3/4” female pipe thread (FPT). See Fig. 24.

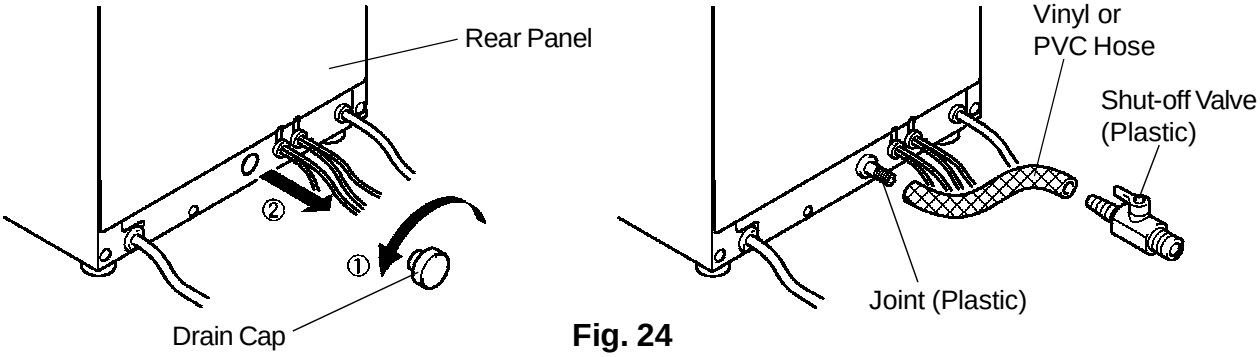

Fig. 24

* Put the Salt Water Hose through the Cap (Accessory) and push in the Salt Water Hose until the Stopper hits the Cap. See Fig. 25. In case of using a larger tank, install the Salt Water Hose so that the filter on the Salt Water Hose can reach the bottom of the tank.

Note: Install the piping so that the outlets are located above the Salt Water Filter on the end of the Salt Water Hose. Due to the siphon phenomenon, salt water may leak from the outlets if they are not high enough. See Fig. 26.

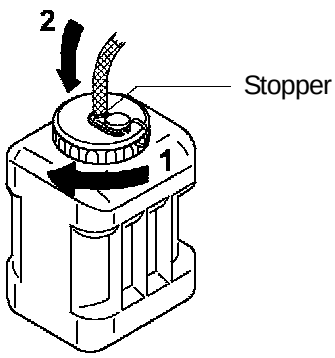

Fig. 25

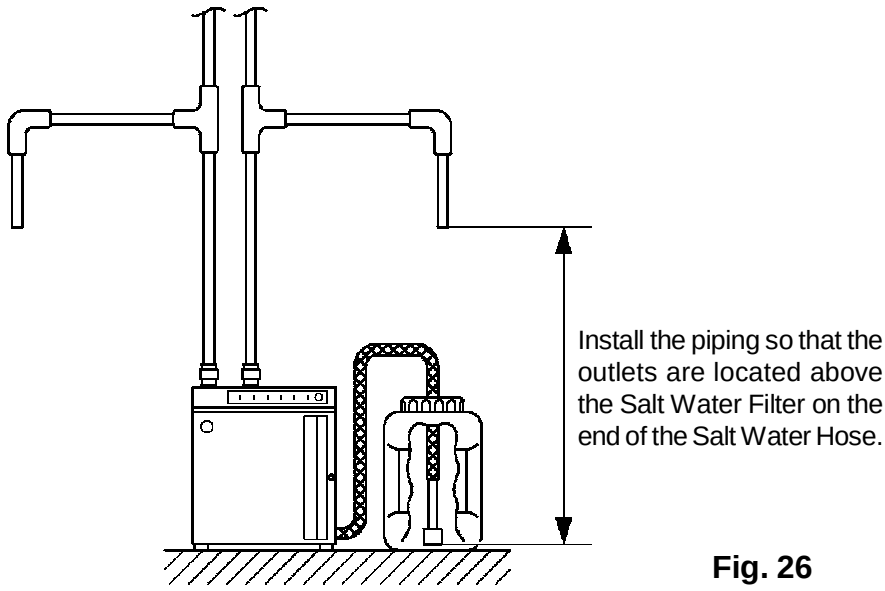

Fig. 26

* Acid and Alkaline Water Discharge Outlet is 1/2” MPT.

Note: The vertical length of the pipes for electrolytic water should be a maximum of 80”. The electrolytic water may not be able to flow or the flow rate may not be maintained if the piping length is outside of this range. Install the piping to the Water Tank so that the outlets are located above the unit. The difference in the gas amount between acid water and alkaline water may change the flow rate balance and cause poor performance. Use unions between the pipes and the unit so that the hoses can be removed from the unit easily. See Fig. 27.

* Be sure to install vent pipes on the piping for electrolytic water.

Note: Use 1/2-3/4” pipes for vertical piping and 3/4” for horizontal piping and vent piping. This can reduce the influence of scale in the alkaline water pipe and help stabilize the amount of alkaline water to generate. Also be sure to have about 5/100 pitch (downward) for horizontal piping. See Fig. 27.

* Be sure to install PVC or acid and alkaline resistant inspection valves on the vertical piping to measure acid and alkaline water. See Fig. 27.

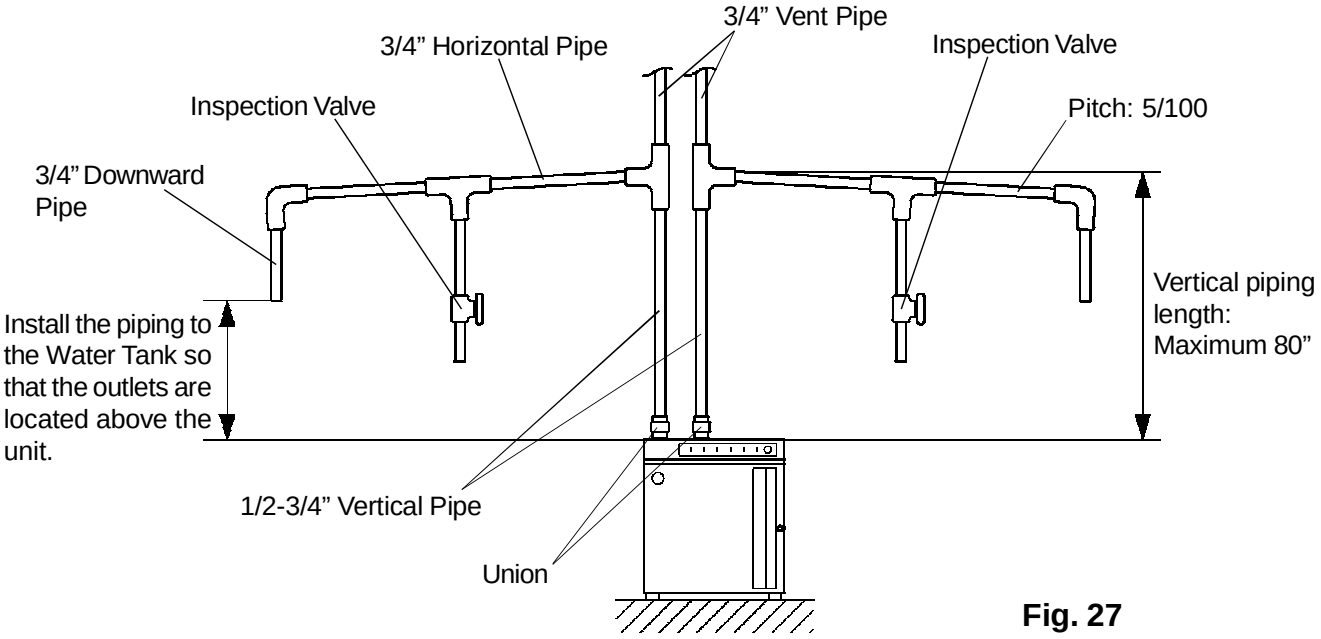

Fig. 27

* Be sure to install overflow pipes and drain pipes on the Water Tanks.

Note: Use 3/4” overflow and drain pipes. Install traps on the overflow pipes and/ either PVC or acid and alkaline resistant shut-off valves on the drain pipes. See Fig. 28. Locate the overflow pipes so that they will be located above the Float Switches on each Water Tank.

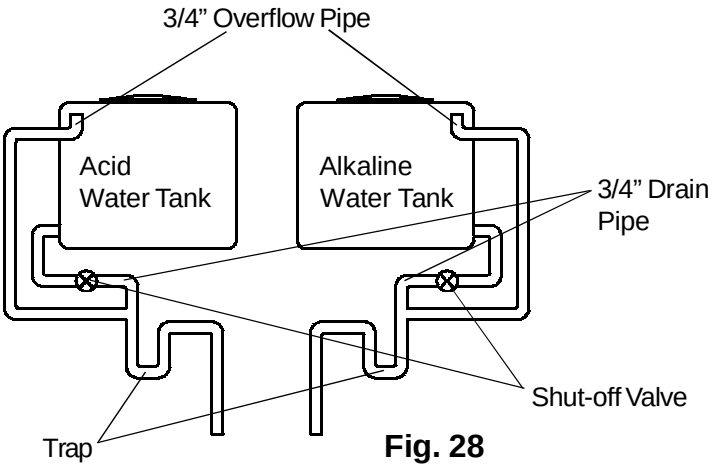

Fig. 28

* A water supply line shut-off valve and drain valve should be installed.

* The drains must have 1/4” fall per foot on horizontal runs to get a good flow.

* The drains should not be piped directly to the sewer system. An air gap of a minimum of 2 vertical inches should be between drain pipe ends and the floor drain, the hose ends from the water electrolyzer and the floor drain, and the water supply line drain valve and the floor drain.

* This water electrolyzer should be installed in accordance with applicable national, state and local regulations.

* A plumbing permit and services of a licensed plumber may be required in some areas.

* Piping Example

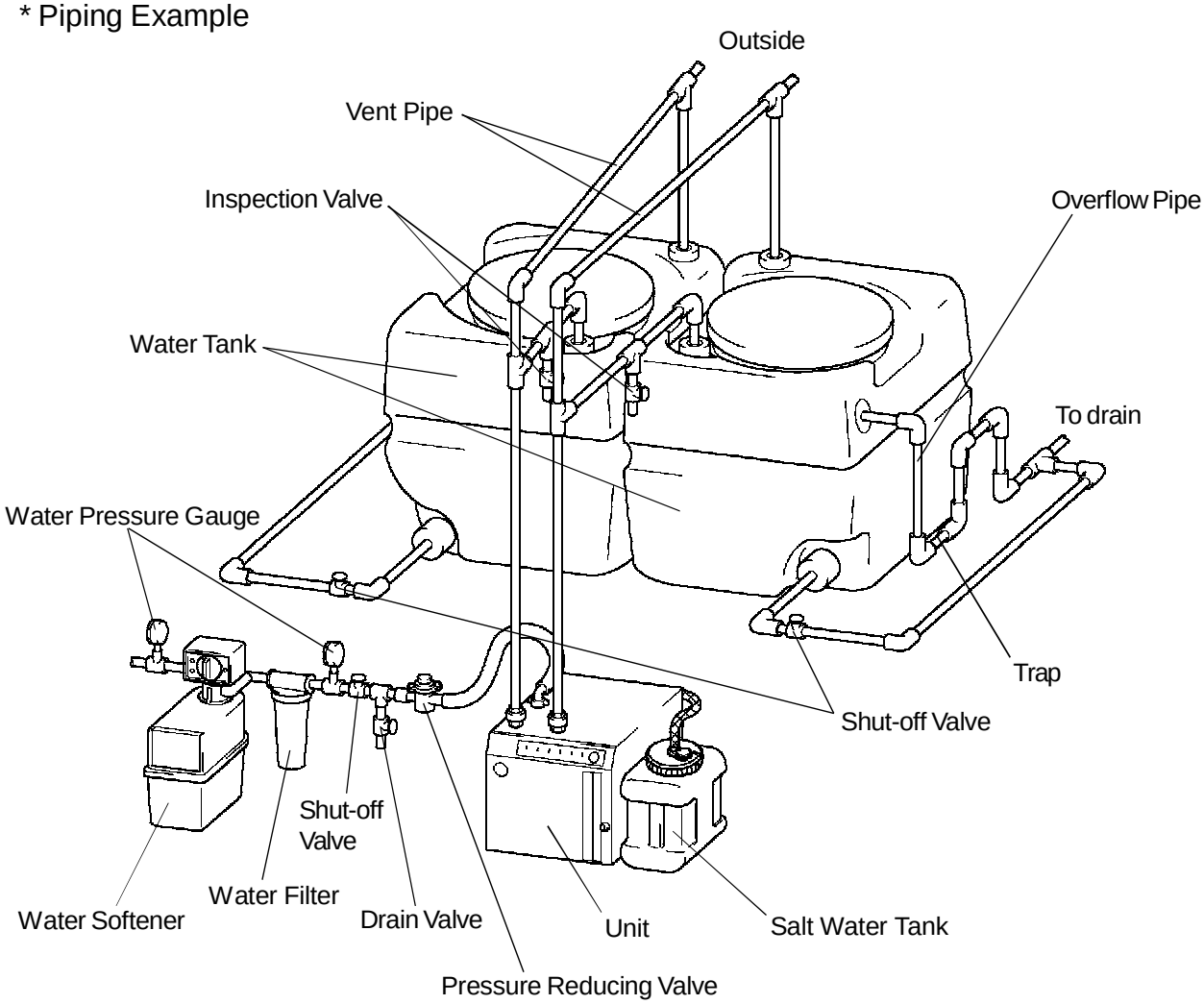

Fig. 29

10. OPERATION MODE SETTING

CAUTION

Be sure to set the operation mode before operating the unit with the Remote Controller or the Water Tank. Operating the unit without setting the operation mode may lower the performance of the electrolytic water or spilling of acid electrolytic water and/or alkaline electrolytic water.

1) Remove the Salt Water Hose from the Salt Water Tank.

2) Turn the Power Switch on with the Door open.

3) Press the Dispense Button on the Display Panel.

4) Check that the Add Salt Water Lamp is on.

5) The Display Window on the Control Panel will indicate the current operation time (h) and the Operation Time Lamp is on. Press the Set Button and keep holding down the button.

6) Check that the Display Window is showing ”Nor”. “Nor” indicates that the unit is currently in the Normal Mode. See Fig. 30.

7) Press the Display Select Button once while holding down the Set Button.

8) Check that the Display Window is showing “AdJ”. “AdJ” indicates that the unit is currently in the Adjust Mode. See Fig. 31.

9) Release the Set Button.

10) Check that the Display Window is showing ”A1“. “A1” indicates that the unit is in Stage 1 of the Adjust Mode. There are 9 Stages in the Adjust Mode. See Fig. 32.

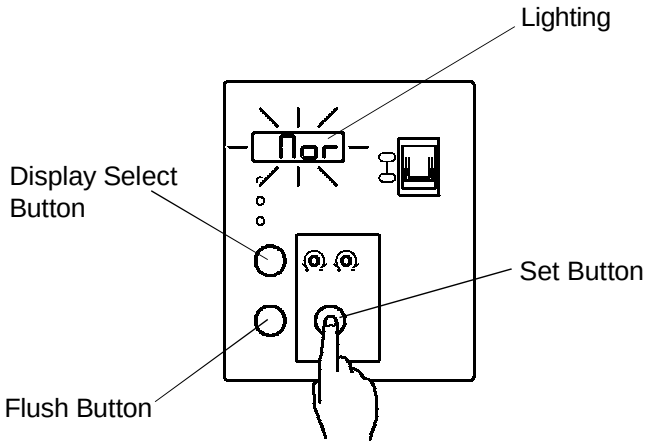

Fig. 30

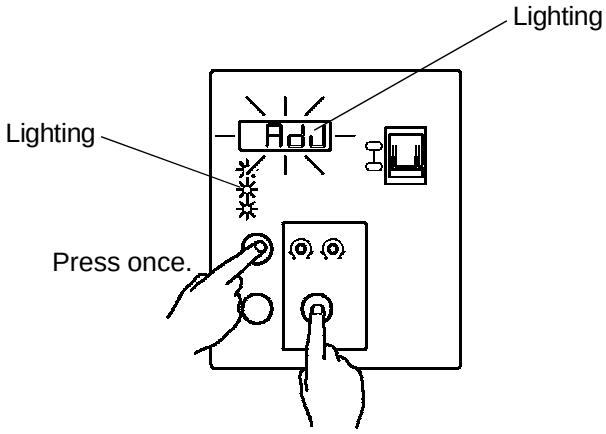

Fig. 31

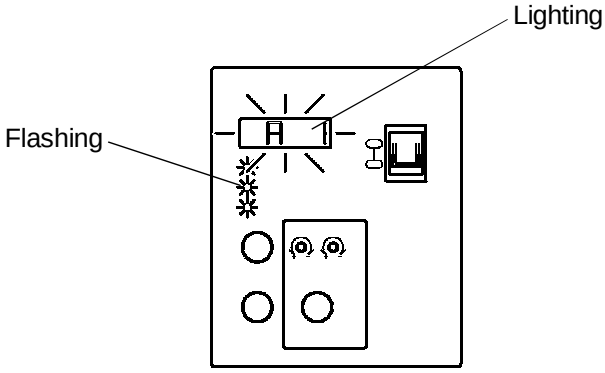

Fig. 32

11) Press the Display Select Button 5 times to advance to “A6”. This is the stage to set the operation mode. If the Display Select Button is pushed more than 5 times and the Display Window shows a code other than “A6”, continue to push the Display Select Button until “A6” reappears.

12) Press the Flush Button once. The Display Window will flash the current operation mode (factory setting: “SFt.H”). The operation mode can be set now. See Fig. 33.

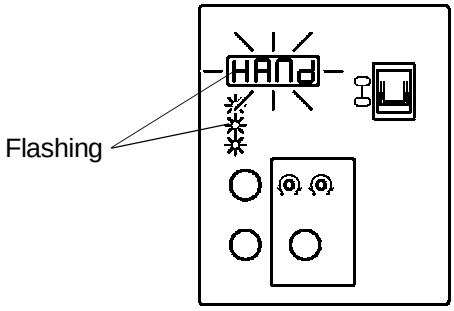

Fig. 33

13) Press the Display Select Button or Flush Button until the appropriate operation mode is displayed depending on the unit installation condition. The Display Window continues to flash.

SFt.H ---- With the Remote Controller installed.
SFt.P ---- With the Water Tank installed.
HANd --- Do not set (for the Remote Controller and Water Level Sensor application only).
POOL --- Do not set (for the Water Tank and Water Level Sensor application only).

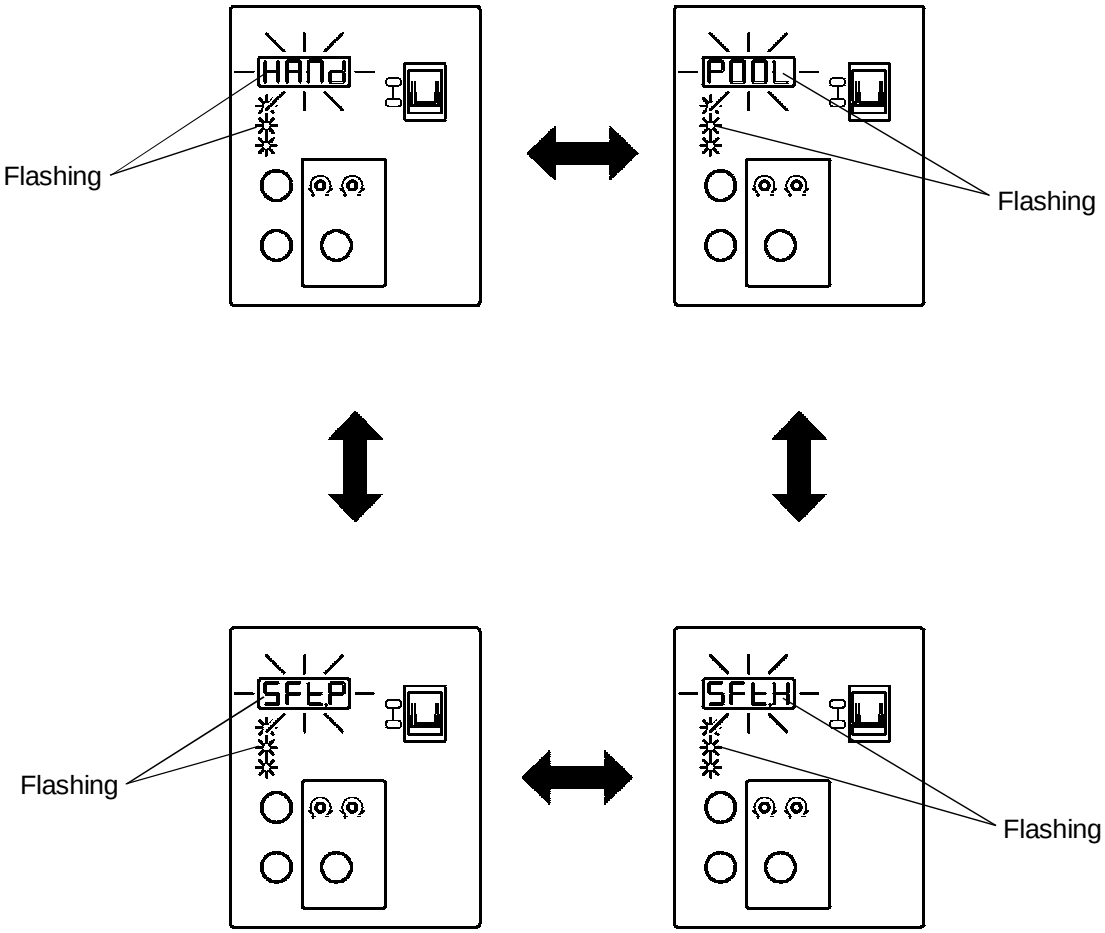

Fig. 34

14) When the desired mode appears in the Display Window, press the Set Button once. The mode displayed in the Display Window will stop flashing momentarily. Check that “A6” appears in the Display Window. See Fig. 35.

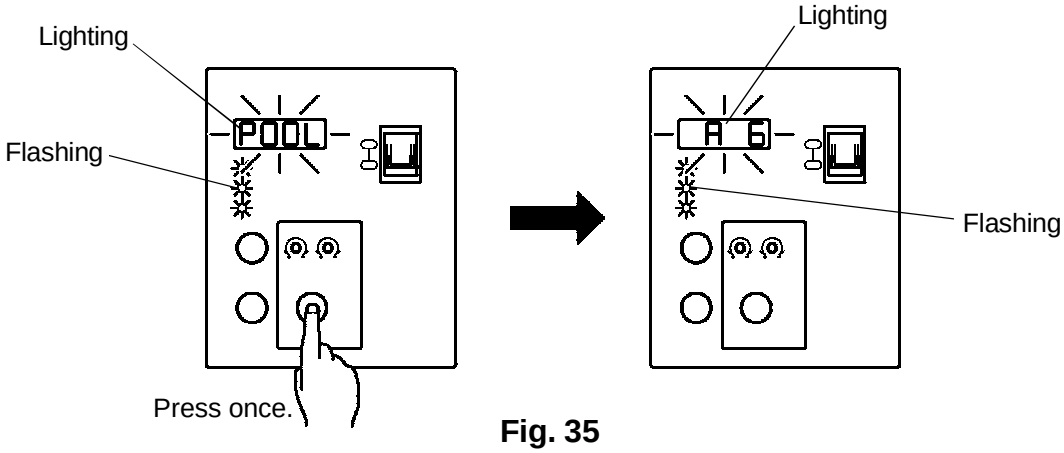

Fig. 35

15) When “A6” appears in the Display Window, hold down the Set Button. Check that “AdJ” is displayed in the Display Window.

16) Press the Display Select Button once holding down the Set Button.

17) Check that “CHE” is displayed in the Display Window. “CHE” indicates that the unit is in the Check Mode. See Fig. 36.

18) Press the Display Select Button one more time holding down the Set Button.

19) Check that “Nor.” is displayed in the Display Window.

20) Release the Set Button.

21) This is the end of setting.

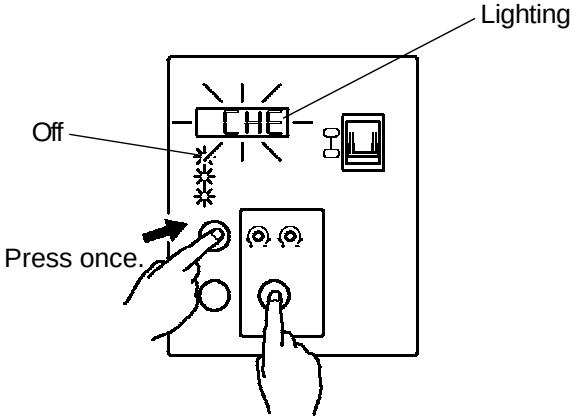

Fig. 36

11. FINAL CHECK LIST

1) Is the water electrolyzer level?

2) Is the water tank level?

3) Is the water electrolyzer in a site where the ambient temperature is within +40°F to +95°F (+5°C to +35°C) and the water temperature within +40°F to +85°F (+5°C to +30°C) all year around?

4) Is there at least 6” clearance at rear, sides and top of the water electrolyzer for maintenance or service?

5) Is there at least 24” clearance at rear, sides and top of the water tank for maintenance or service?

6) Have all electrical and piping connections been made?

7) Have the water softener and water filter been installed?

8) Is water from the water softener soft?

9) Are you using potable water?

10) Has the power supply voltage been checked or tested against the nameplate rating?

11) Have the water supply line shut-off valve and drain valve been installed? Has the water supply pressure for the ROX-20TA-U been checked to ensure a minimum of 15 PSIG (0.10MPa) and a maximum of 115 PSIG (0.78MPa)?

12) Is the water tank securely fixed?

13) Has the pressure reducing valve been installed?

14) Is the installation area well ventilated?

15) Has the operation mode been set?

16) Has the end user been given the instruction manual, and instructed on how to operate the water electrolyzer and the importance of the recommended periodic maintenance?

17) Has the end user been given the name and telephone number of an authorized service agent?

18) Has the warranty tag been filled out and forwarded to the factory for warranty registration?

IV. CHECKS BEFORE OPERATION

1. CHECKING AMOUNT OF REMAINING SALT WATER

1) Check that there is enough salt water in the Salt Water Tank.

2) Add salt water following “IV. 2. MAKING SALT WATER” if there is not enough or no salt water in the tank.

2. MAKING SALT WATER

IMPORTANT

1. Use sodium chloride salt (NaCl) or potassium chloride (KCl) with over 99% purity. Salt other than those may damage the unit, clog pipes, etc.

2. Shake the tank until salt is completely dissolved. Salt lumps may damage the unit.

1) Prepare the Salt Water Tank. Remove the Salt Water Hose and Cap from the Salt Water Tank when using the Accessory Salt Water Tank. The Salt Water Tank should be empty.

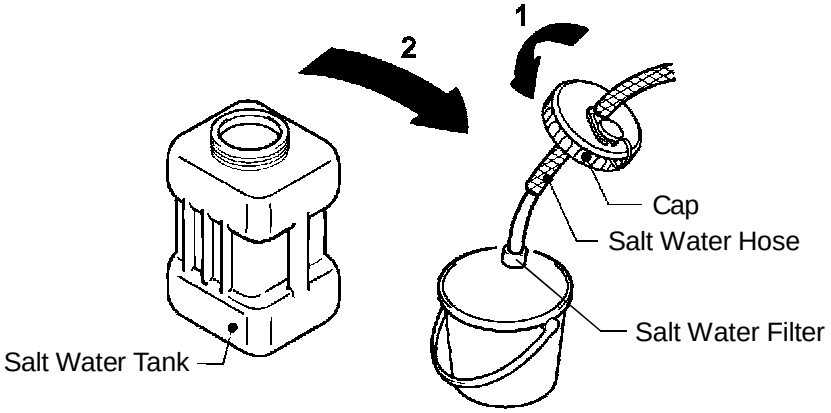

Fig. 37

2) Add a full cup (approximately 24 oz) of sodium chloride salt (NaCl) or potassium chloride (KCl) of 99% purity to the Salt Water Tank. Be sure to use the Accessory Salt Measuring Cup.

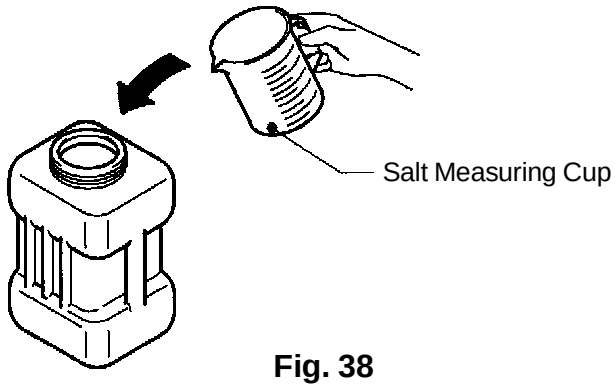

Fig. 38

3) Add water to the Salt Water Tank until water reaches the 5L line. This yields salt water with approximately 13% concentration.

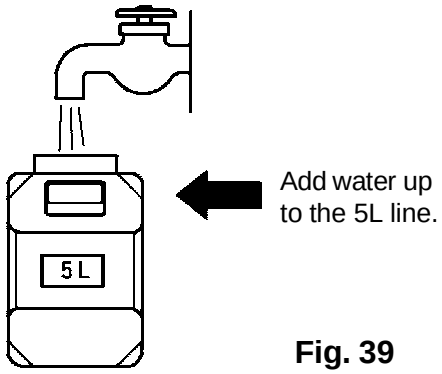

Fig. 39

4) Check that the Mini Cap is closed, and put the Cap on the Salt Water Tank. Shake it until sodium chloride salt (NaCl) or potassium chloride (KCl) completely dissolves in the water.

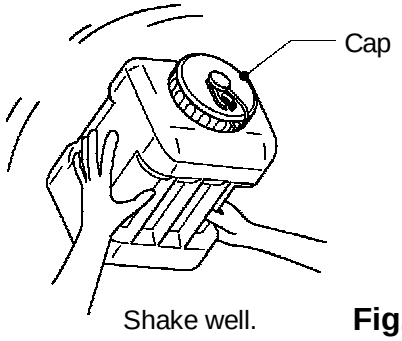

Fig. 40

5) Open the Mini Cap and put it in the recess, and push in the Salt Water Hose until the Stopper hits the Cap.

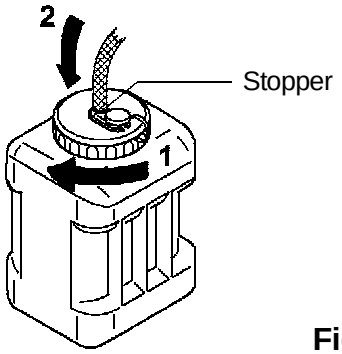

Fig. 41

3. PURGING SALT WATER SUPPLY PUMP

This unit uses a pump to supply salt water. If the Salt Water Supply Pump contains air, electrolytic water cannot be dispensed properly. When the unit is installed for the first time, when the Add Salt Water Lamp on the Display Panel goes on, or when the Error Lamp on the Display Panel turns on and the Display Window on the Control Panel shows the error code “E51”, purge air from the Salt Water Supply Pump as follows:

1) Check that there is enough salt water in the Salt Water Tank.

2) Open the Door and check that the Power Switch is off. Turn the Power Switch off if it is on.

3) Turn the Power Switch back on.

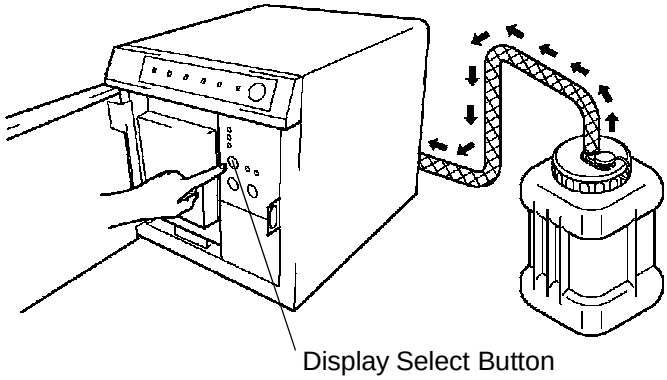

Fig. 42

4) Press the Display Select Button and hold it down.

5) The Pump starts running and pumping up the salt water to purge the Salt Water Hose. It takes about 20 seconds to purge a 60” long hose. The sound of the Pump will change from high to low when the air is removed.

6) Release the Display Select Button when air is purged.

V. OPERATION

1. START UP

WARNING

1. Do not drink electrolytic water or allow contact in eyes or face. Use for other than washing purpose may cause health problems. Rinse with plenty of tap water if electrolytic water gets into eyes or face.

2. To prevent an electric shock, do not touch the Attachment Plug, Power Switch, or other electrical parts with damp hands.

3. The Power Cord should not be modified, jerked, bound, brought close to heat producing equipment, pressed down or pinched. It may be damaged and cause a risk of electric shocks or fires.

4. All parts are factory-adjusted. Improper adjustment may result in failure.

5. Do not splash water directly onto the unit. It may cause a short circuit, electric shock, corrosion or failure.

6. Install an adequate ventilating system. Hydrogen gas or chlorine gas may cause health problems.

CAUTION

1. Use glass, plastic or stainless steel containers for electrolytic water. Acid water may corrode metal.

2. Do not use combustible spray or place volatile and flammable substances near the unit. They could catch fire from a spark of a switch or the like.

3. Do not place heavy objects or water containing vessels on the unit. They could fall off and cause injury, or spilt water could degrade the electrical insulation and increase the risk of electric leaks.

1) Open the Water Supply Line Shut-off Valve.

2) Check for proper operation of the Water Softener.

Note: When using the Water Softener for the first time, supplied water may be yellow due to an outflow of the ion-exchange plastic inside the Water Softener. Open the Water Supply Line Drain Valve and drain supplied water till it is clear.

3) Check that the Salt Water Tank is properly set up.

4) Check that the Salt Water Supply Pump is purged.

5) Plug in the unit.

6) Open the Door and move the Power Switch to the “ON “ position.

7) Close the Door.

8) Press the Dispense Button on the Display Panel or the Remote Controller if the Remote Controller is installed. Press the Dispense Button on the Display Panel if the Water Tank is installed.

9) The Dispensing Lamp will turn on and the Ready Lamp will be flashing. Ineffective electrolytic water will be dispensed at first.

Note: Do not use electrolytic water while the Ready Lamp is flashing when using water dispensed from the Remote Controller. With the Water Tank, ineffective electrolytic water and effective water will mix inside the Water Tank and the mixed water will be effective.

10) When the water becomes effective, the Ready Lamp stops flashing and stays on.

11) Check the water supply and drain connections for water leakage.

2. SHUT DOWN

1) For daily shutdown, press the Dispense Button on the Display Panel or Remote Controller. The Ready Lamp will flash for about 3 seconds and the unit will stop dispensing electrolytic water. To restart the unit, press the Dispense Button on the Display Panel or Remote Controller.

2) For long storage, see “VI. 7. PREPARING WATER ELECTROLYZER FOR LONG STORAGE”.

VI. MAINTENANCE

1. CHECKING pH AND AVAILABLE CHLORINE CONCENTRATION

IMPORTANT

Be sure to check electrolytic water before use.

1) Dispense acid and alkaline water into glasses or other containers.

2) Use the Test Paper to check the following values:

Check Item	Applicable Test Paper
Acid Water pH Value	pH Tester TB
Alkaline Water pH Value	pH Tester AZY
Acid Water Available Chlorine Concentration	Chlorine Tester

Note: It is not necessary to check the available chlorine concentration of alkaline water.

3) Check that each value is within the following range:

Specified range for each value

	pH	Available Chlorine Concentration
Acid Water	Approx. 2.7 or less	20-30mg/L or more
Alkaline Water	Approx. 11.3 or more	N/A

Note: See the Instruction Manual of each test paper for details of its proper handling. If any of the checked values exceeds the specified range, contact an authorized Hoshizaki service company. To order a new supply of test paper, contact an authorized Hoshizaki service company.

4) Fill in a copy of the “VIII. DAILY INSPECTION SHEET” and keep a record of the checked value.

2. FLUSHING ALKALINE WATER PIPE

IMPORTANT

Scale, such as calcium, magnesium, etc. forms inside the Alkaline Water Pipe. The use of the alkaline pipe with scale for a long period of time may prevent the flow of alkaline water, stop the unit or cause poor performance. To prevent scale from accumulating, flush the Alkaline Water Pipe periodically.

* Flush the Alkaline Water Pipe at least once a month depending on water quality.

1) Follow “V. 1. START UP” and dispense electrolytic water.

2) Open the Door of the unit.

3) Press the Flush Button. The Flush Lamp will light and the flush cycle will start. During this operation, alkaline water is dispensed from the Acid Water Outlet and acid water from the Alkaline Water Outlet.

Note: When using the Remote Controller, be sure to check the Electrolytic Water Lamp since the lower lamps will turn on. For the Water Tank, drain water from both Water Tanks in advance since the opposite water will be stored.

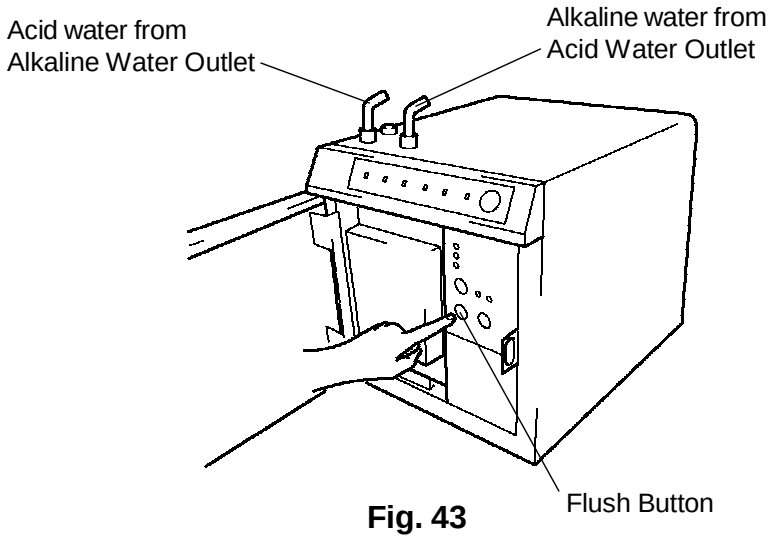

Fig. 43

4) Dispense electrolytic water for 2 hours (flushing time may vary depending on how bad the Alkaline Water Pipe is clogged.). Continue to dispense electrolytic water or use the water during the flushing operation.

5) To end the flush cycle, press the Flush Button once more while electrolytic water is being dispensed. The Flush Lamp will go off and electrolytic water will be dispensed from the normal outlets indicating normal operation.

Note: When using the Remote Controller, be sure to check the Electrolytic Water Lamp since the upper lamps will turn on. For the Water Tank, drain water from both Water Tanks in advance since the opposite water will be stored.

3. CLEANING SALT WATER FILTER AND SALT WATER TANK

CAUTION

For cleaning and inspection, turn the power switch off and unplug the unit. There may be water in parts, which may cause an electric shock or burn.

1) Prepare the Salt Water Tank. Remove the Salt Water Hose and Cap from the Salt Water Tank when using the Accessory Salt Water Tank.

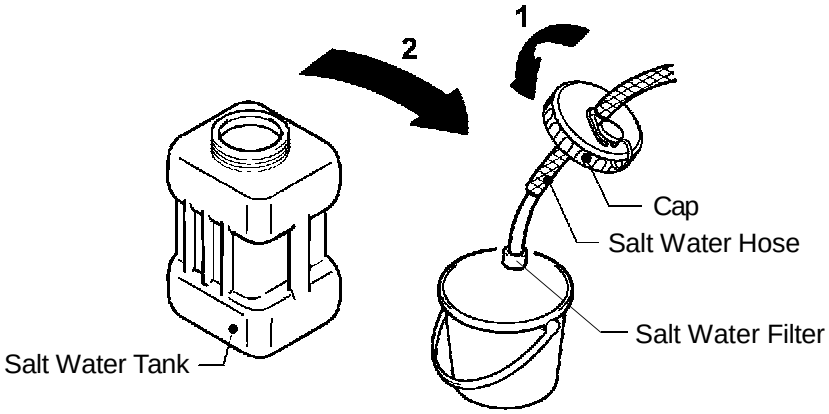

Fig. 44

2) Rinse the Salt Water Filter attached to the Salt Water Hose with warm water and remove dirt and dust from the Salt Water Filter.

3) Clean the Salt Water Tank with a neutral detergent and remove salt lumps, dust, etc. Rinse the Salt Water Tank well.

4) Wipe off the Salt Water Tank.

5) Put the Salt Water Hose with the Salt Water Filter through the Cap and push in the Salt Water Hose until the Stopper hits the Cap. In case of using a larger tank, install the Salt Water Hose so that the Salt Water Filter on the Salt Water Hose can reach the bottom of the tank.

4. CHECKING WATER SOFTENER

* Check that water from the Water Softener is soft.

* Check that there is enough salt for regeneration in the Water Softener.

* For other instructions, follow the Instruction Manual for the Water Softener.

5. CHECKING WATER FILTER

* The Water Filter should be installed as shown in the following illustration.

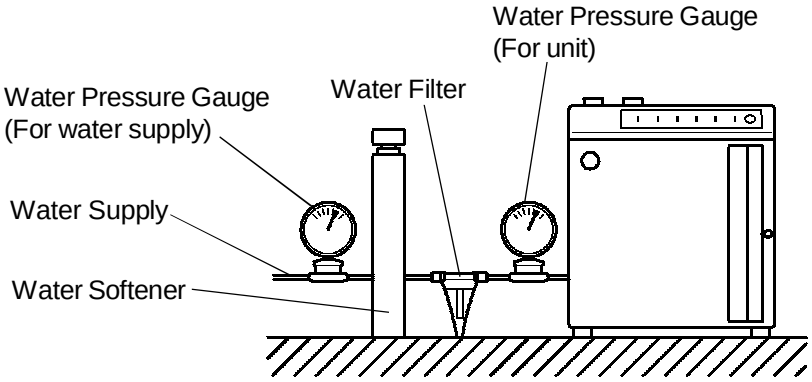

Fig. 45

* Measure pressure on the water supply side and unit side. Contact an authorized Hoshizaki service company for a filter change if the pressure difference is over 15PSIG (0.1MPa).

6. EXTERIOR

CAUTION

Do not splash water directly onto the unit. It may cause a short circuit, electric shock, corrosion or failure.

IMPORTANT

Do not use thinner, benzine, alcohol, petroleum, powder soap, polish, alkaline detergent, acid or pot cleaner. They may damage the painted or plastic surfaces.

1) Wipe off the unit with warm water. If a neutral detergent is used to wipe off the unit, wipe off again with warm water.

2) The Display Panel, Salt Water Tank and Remote Controller are plastic. Do not hit or scratch with a sharp knife, etc.

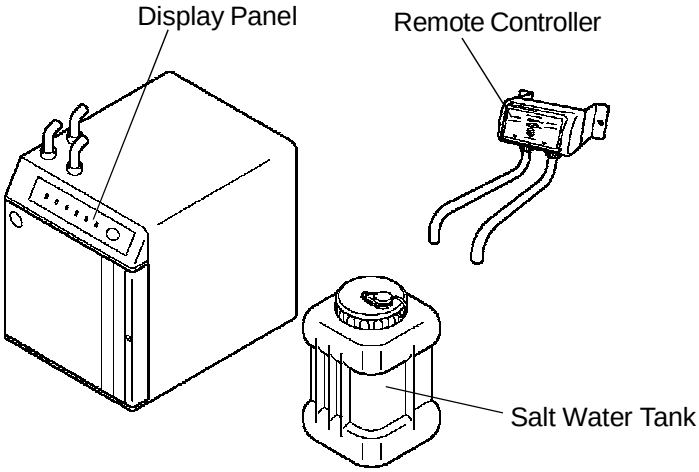

Fig. 46

7. PREPARING WATER ELECTROLYZER FOR LONG STORAGE

CAUTION

Remove water from the unit if the unit is not used for more than a week. Foul water may damage the unit.

IMPORTANT

Before operating the water electrolyzer next time, check that the Drain Valve is closed and open the Water Supply Line Shut-off Valve.

1) Follow the “V. 2. SHUT DOWN” and shut down the unit.

2) Close the Water Supply Line Shut-off Valve.

3) Drain salt water from the Salt Water Tank and rinse the inside the Salt Water Tank to remove salt completely with tap water.

4) Fill the Salt Water Tank with tap water and connect the Salt Water Hose.

5) Follow the “IV. 3. PURGING SALT WATER SUPPLY PUMP” to wash the salt water circuit with tap water. Keep the water running for at least 3 minutes.

6) Disconnect the Salt Water Hose from the Salt Water Tank and drain the hose. Wipe out the Salt Water Hose and Salt Water Filter with a clean cloth.

7) Drain the water from the Salt Water Tank.

8) Turn the power switch off and close the Door.

9) Open the Drain Valve on the back of the unit or remove the Drain Cap to drain the remaining water.

10) Open the Water Supply Line Drain Valve.

VII. TROUBLE SHOOTING

1. WHEN ELECTROLYTIC CELL REPLACE LAMP IS ON

IMPORTANT

To maintain effective performance of electrolytic water, change the electrolytic cell every 3000 operating hours (frequency for changing may vary depending on water quality). Contact an authorized Hoshizaki service company when the Electrolytic Cell Replace Lamp is on.

* The Electrolytic Cell Replace Lamp starts flashing when the operation of the unit reaches 2900 hours. Electrolytic water can still be dispensed.

* When the unit reaches 3000 hours, the Electrolytic Cell Replace Lamp stays on and the Service Call Lamp starts flashing. Be sure to contact an authorized Hoshizaki service company.

2. WHEN ADD SALT LAMP IS ON

IMPORTANT

Contact an authorized Hoshizaki service company when problems cannot be handled by a user.

* When the Add Salt Lamp on the Display Panel is on, follow “IV. 2. MAKING SALT WATER” and add salt water to the Salt Water Tank. See the following for details.

Error Lamp	Error Code	Possible Cause and Countermeasure
Add Salt Lamp	None	Not sufficient salt water. (1) Is salt water in the Salt Water Tank low? See “IV. 2. MAKING SALT WATER” and add salt water to the tank.
		The amperage to the Cell is below the set value (10A at shipping) and the speed of the Salt Water Supply Pump is abnormally high. (1) Is the salt water concentration too low? Add salt to the Salt Water Tank and adjust the concentration. (2) Is salt accumulating on the bottom of the Salt Water Tank? Is the salt water concentration even in the Salt Water Tank? Break lumps in the Salt Water Tank and adjust the concentration. (3) Is the Salt Water Hose free of air? Follow “IV. 3. PURGING SALT WATER SUPPLY PUMP” and purge the Salt Water Hose.

Error Lamp	Error Code	Possible Cause and Countermeasure
		(4) Is the Salt Water Filter on the end of the Salt Water Hose free of dirt or dust? Remove dirt and dust from the Salt Water Filter. (5) Is the Salt Water Hose free of salt lumps, etc.? Remove the cause that is blocking the Salt Water Hose. (6) Are hoses connected with the outlets of the Remote Controller? Disconnect the hoses to maintain the balance of the electrolytic water flow rate. (7) Is the electrolytic water flow rate too high? Adjust the water pressure on the primary side. Make sure that the Pressure Reducing Valve is correctly installed.

3. WHEN SERVICE CALL LAMP IS ON

WARNING

1. To prevent an electric shock, do not touch the Attachment Plug, Power Switch, or other electrical parts with damp hands.

2. When abnormal situations occur, turn the Power Switch off and unplug the unit or turn off the main power and contact an authorized Hoshizaki service company. Continuous operation with problems may cause an electric shock or fire.

1) If the Error Lamp on the Display Panel is on, open the Door of the unit.

2) Check an error code in the Display Window. There are error codes for “Contact authorized Hoahizaki service company immediately” and “Check by user”.

[a] CONTACT AUTHORIZED HOSHIZAKI SERVICE COMPANY

Error Lamp	Error Code	Possible Cause and Countermeasure
Service Call Lamp	E14	Defective Water Valve * Repair or replacement is required.
	E52	Defective Current Sensor or Switching Regulator * Repair or replacement is required.
	E61	Defective Flow Switching Valve * Repair or replacement is required.
	E62	Defective Microswitch * Repair or replacement is required.
	E65	Defective Gear Motor * Repair or replacement is required.

* When these Error Lamps and Error Codes are on, turn off the power switch and contact an authorized Hoshizaki service company.

[b] CHECK BY USER

Error Lamp	Error Code	Possible Cause and Countermeasure
Service Call Lamp	E11	Not sufficient water supply. (1) Is the Water Supply securely connected? Resume water supply. (2) Are the outlets for electrolytic water clearly open? Remove the cause(s) that is closing the outlets. (3) Are hoses to connect the unit with Remote Controller or Water Tank bent ? Remove the cause(s) that is bending the hoses. (4) Is the Water Valve (water supply inlet) free of dirt or dust? Remove dirt or dust and resume water supply. (5) Is the Alkaline Water Pipe free of scale? Follow "VI. 2. FLUSHING ALKALINE WATER PIPE" and flush the pipe. (6) Is the water circuit inside the unit clear? Remove the cause(s) that is blocking the water circuit.
	E43	The amperage to the Cell is above the set value (14A at shipping) and the speed of the Salt Water Supply Pump is abnormally low. (1) Is too much salt water supplied to the unit when the unit is initially installed or at the initial operation after removing water from the unit for the first time? Dispense water again and adjust the salt concentration inside the water circuit. Dispensing water several times will help lower the salt concentration. (2) Is the salt water concentration too high? Add water to the Salt Water Tank and adjust the concentration. (3) Are hoses connected with the outlets of the Remote Controller? Disconnect the hoses to maintain the balance of the electrolytic water flow rate.
	E51	Not sufficient salt water. (1) Is salt water in the Salt Water Tank low? See "IV. 2. MAKING SALT WATER" and add salt water to the tank.
		The amperage to the Cell is below 3A and the speed of the Salt Water Supply Pump is gradually getting high. (1) Is the Salt Water Hose free of air? Follow "IV. 3. PURGING SALT WATER SUPPLY PUMP" and purge the Salt Water Hose. (2) Is salt water supplied to the unit when the unit is initially installed or at the initial operation after removing water from the unit? Follow "IV. 3. PURGING SALT WATER SUPPLY PUMP" and purge the Salt Water Hose.

Error Lamp	Error Code	Possible Cause and Countermeasure
Service Call Lamp	E51	(3) Is the salt water concentration too low? Add salt to the Salt Water Tank and adjust the concentration. (4) Is salt accumulating on the bottom of the Salt Water Tank? Is the salt water concentration even in the Salt Water Tank? Break lumps in the Salt Water Tank and adjust the concentration. (5) Is the Salt Water Filter on the end of the Salt Water Hose free of dirt or dust? Remove dirt and dust from the Salt Water Filter. (6) Is the Salt Water Hose free of salt lumps, etc.? Remove the cause that is blocking the Salt Water Hose.

* Follow the above check items and inspect the unit. After inspection, turn the Power Switch on the Control Panel on and start the unit. If problems persist, turn the Power Switch off and contact an authorized Hoshizaki service company immediately.

4. PROBLEMS WITHOUT ALARM INDICATION

1) Unit fails to operate:

(1) Power failure. Wait until power supply is resumed.
(2) Unplugged. Plug in the unit.

2) Noise:

(1) Noise from water supply and pump. This is normal.
(2) Installed on an unsteady floor. Contact an authorized Hoshizaki service company.
(3) Not leveled in the left-to-right or front-to-rear directions. Contact an authorized Hoshizaki service company.

VIII. DAILY INSPECTION SHEET

* Make copies of this page.

Date										
Time										
pH	Acid water									
	Alkaline water									
Available chlorine concentration (mg/L)										
Water supply temp. (°F) or (°C)										
Cell operating time (h)										
Responsible person										

Date										
Time										
pH	Acid water									
	Alkaline water									
Available chlorine concentration (mg/L)										
Water supply temp. (°F) or (°C)										
Cell operating time (h)										
Responsible person										

Date										
Time										
pH	Acid water									
	Alkaline water									
Available chlorine concentration (mg/L)										
Water supply temp. (°F) or (°C)										
Cell operating time (h)										
Responsible person										

Date										
Time										
pH	Acid water									
	Alkaline water									
Available chlorine concentration (mg/L)										
Water supply temp. (°F) or (°C)										
Cell operating time (h)										
Responsible person										

Date										
Time										
pH	Acid water									
	Alkaline water									
Available chlorine concentration (mg/L)										
Water supply temp. (°F) or (°C)										
Cell operating time (h)										
Responsible person										

HOSHIZAKI

HOSHIZAKI AMERICA, INC.
618 HIGHWAY 74 SOUTH
PEACHTREE CITY, GA 30269
U.S.A.
PHONE: 770-487-2331
www.hoshizakiamerica.com

91U8AA10C